FANUC Robot F-200*i*B

MECHANICAL UNIT

MAINTENANCE MANUAL

B-81725EN/05

- **Original Instructions**

Before using the Robot, be sure to read the "FANUC Robot Safety Manual (B-80687EN)" and understand the content.

This manual can be used with controllers labeled R-30*i*A or R-J3*i*C. If you have a controller labeled R-J3*i*C, you should read R-30*i*A as R-J3*i*C throughout this manual.

The products in this manual are controlled based on Japan's "Foreign Exchange and Foreign Trade Law". The export from Japan may be subject to an export license by the government of Japan.
Further, re-export to another country may be subject to the license of the government of the country from where the product is re-exported. Furthermore, the product may also be controlled by re-export regulations of the United States government.
Should you wish to export or re-export these products, please contact FANUC for advice.

In this manual we have tried as much as possible to describe all the various matters.
However, we cannot describe all the matters which must not be done, or which cannot be done, because there are so many possibilities.
Therefore, matters which are not especially described as possible in this manual should be regarded as "impossible".

SAFETY PRECAUTIONS

Thank you for purchasing FANUC Robot.
This chapter describes the precautions which must be observed to ensure the safe use of the robot.
Before attempting to use the robot, be sure to read this chapter thoroughly.

Before using the functions related to robot operation, read the relevant operator's manual to become familiar with those functions.

If any description in this chapter differs from that in the other part of this manual, the description given in this chapter shall take precedence.

For the safety of the operator and the system, follow all safety precautions when operating a robot and its peripheral devices installed in a work cell.
In addition, refer to the “FANUC Robot SAFETY HANDBOOK (B-80687EN)”.

1 WORKING PERSON

The personnel can be classified as follows.

Operator:
- Turns robot controller power ON/OFF
- Starts robot program from operator’s panel

Programmer or teaching operator:
- Operates the robot
- Teaches robot inside the safety fence

Maintenance engineer:
- Operates the robot
- Teaches robot inside the safety fence
- Maintenance (adjustment, replacement)

- An operator cannot work inside the safety fence.
- A programmer, teaching operator, and maintenance engineer can work inside the safety fence. The working activities inside the safety fence include lifting, setting, teaching, adjusting, maintenance, etc..
- To work inside the fence, the person must be trained on proper robot operation.

During the operation, programming, and maintenance of your robotic system, the programmer, teaching operator, and maintenance engineer should take additional care of their safety by using the following safety precautions.

- Use adequate clothing or uniforms during system operation
- Wear safety shoes
- Use helmet

2 DEFINITION OF WARNING, CAUTION AND NOTE

To ensure the safety of user and prevent damage to the machine, this manual indicates each precaution on safety with "Warning" or "Caution" according to its severity. Supplementary information is indicated by "Note". Read the contents of each "Warning", "Caution" and "Note" before attempting to use the oscillator.

⚠WARNING
Applied when there is a danger of the user being injured or when there is a danger of both the user being injured and the equipment being damaged if the approved procedure is not observed.

⚠CAUTION
Applied when there is a danger of the equipment being damaged, if the approved procedure is not observed.

NOTE
Notes are used to indicate supplementary information other than Warnings and Cautions.

- Read this manual carefully, and store it in a sales place.

3 WORKING PERSON SAFETY

Working person safety is the primary safety consideration. Because it is very dangerous to enter the operating space of the robot during automatic operation, adequate safety precautions must be observed.
The following lists the general safety precautions. Careful consideration must be made to ensure working person safety.

(1) Have the robot system working persons attend the training courses held by FANUC.

FANUC provides various training courses. Contact our sales office for details.

(2) Even when the robot is stationary, it is possible that the robot is still in a ready to move state, and is waiting for a signal. In this state, the robot is regarded as still in motion. To ensure working person safety, provide the system with an alarm to indicate visually or aurally that the robot is in motion.
(3) Install a safety fence with a gate so that no working person can enter the work area without passing through the gate. Install an interlocking device, a safety plug, and so forth in the safety gate so that the robot is stopped as the safety gate is opened.

The controller is designed to receive this interlocking signal of the door switch. When the gate is opened and this signal received, the controller stops the robot (Please refer to "STOP TYPE OF ROBOT" in SAFETY PRECAUTIONS for detail of stop type). For connection, see Fig.2 (a) and Fig.2 (b).

(4) Provide the peripheral devices with appropriate grounding (Class A, Class B, Class C, and Class D).

(5) Try to install the peripheral devices outside the work area.
(6) Draw an outline on the floor, clearly indicating the range of the robot motion, including the tools such as a hand.
(7) Install a mat switch or photoelectric switch on the floor with an interlock to a visual or aural alarm that stops the robot when a working person enters the work area.
(8) If necessary, install a safety lock so that no one except the working person in charge can turn on the power of the robot.

The circuit breaker installed in the controller is designed to disable anyone from turning it on when it is locked with a padlock.

(9) When adjusting each peripheral device independently, be sure to turn off the power of the robot
(10) Operators should be ungloved while manipulating the operator's panel or teach pendant. Operation with gloved fingers could cause an operation error.
(11) Programs, system variables, and other information can be saved on memory card or USB memories. Be sure to save the data periodically in case the data is lost in an accident.
(12) The robot should be transported and installed by accurately following the procedures recommended by FANUC. Wrong transportation or installation may cause the robot to fall, resulting in severe injury to workers.
(13) In the first operation of the robot after installation, the operation should be restricted to low speeds. Then, the speed should be gradually increased to check the operation of the robot.
(14) Before the robot is started, it should be checked that no one is in the area of the safety fence. At the same time, a check must be made to ensure that there is no risk of hazardous situations. If detected, such a situation should be eliminated before the operation.
(15) When the robot is used, the following precautions should be taken. Otherwise, the robot and peripheral equipment can be adversely affected, or workers can be severely injured.
- Avoid using the robot in a flammable environment.
- Avoid using the robot in an explosive environment.
- Avoid using the robot in an environment full of radiation.
- Avoid using the robot under water or at high humidity.
- Avoid using the robot to carry a person or animal.
- Avoid using the robot as a stepladder. (Never climb up on or hang from the robot.)

(16) When connecting the peripheral devices related to stop(safety fence etc.) and each signal (external emergency , fence etc.) of robot. be sure to confirm the stop movement and do not take the wrong connection.
(17) When preparing trestle, please consider security for installation and maintenance work in high place according to Fig.3 (c). Please consider footstep and safety bolt mounting position.

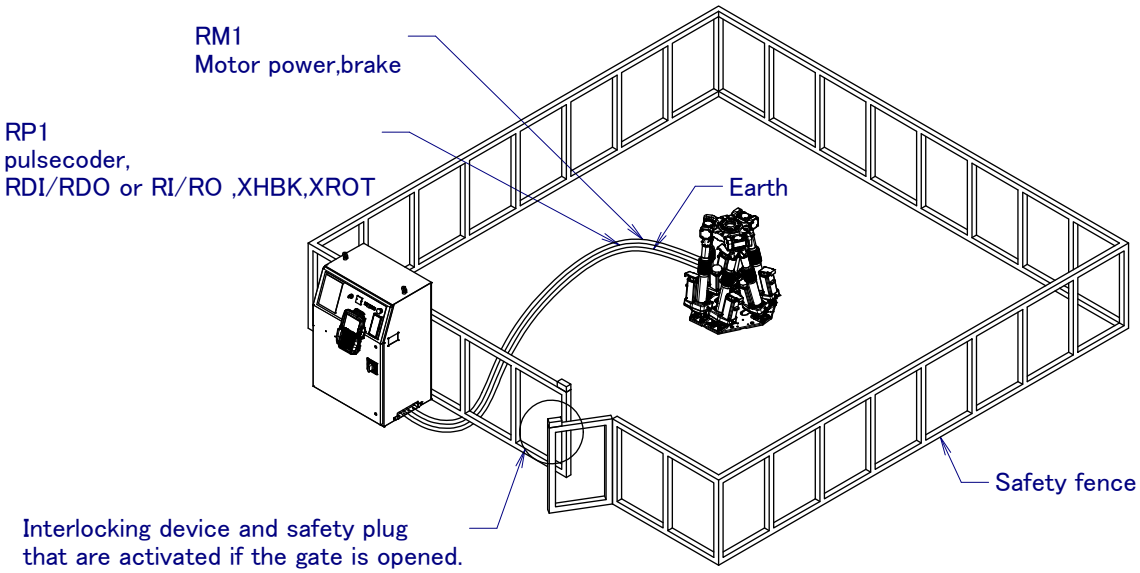

Fig. 3 (a) Safety fence and safety gate

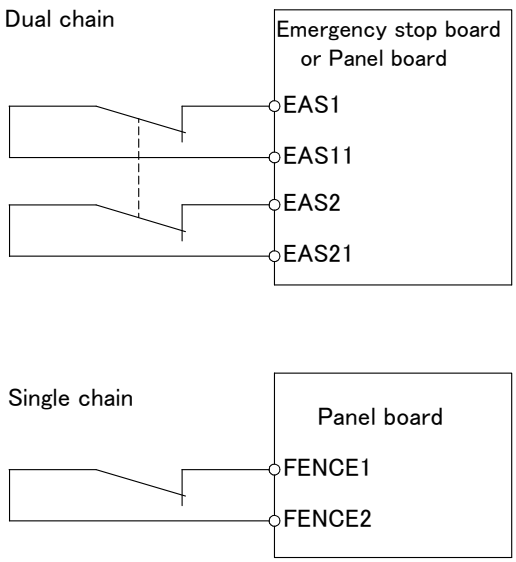

(Note)

In case of R-30*i*B
Terminals EAS1,EAS11,EAS2,EAS21 are provided on the emergency stop board.

In case R-30*i*A
Terminals EAS1,EAS11,EAS2,EAS21 are provided on the emergency stop board or connector panel

In case R-30*i*A Mate
Terminals EAS1,EAS11,EAS2,EAS21 or FENCE1,FENCE2 are provided on the emergency stop board or in the connector panel of CRM65 (Open air type).

Refer to the ELECTRICAL CONNCETIONS Chapter of CONNECTION of controller maintenance manual for details.

Fig. 3 (b) Limit switch circuit diagram of the safety fence

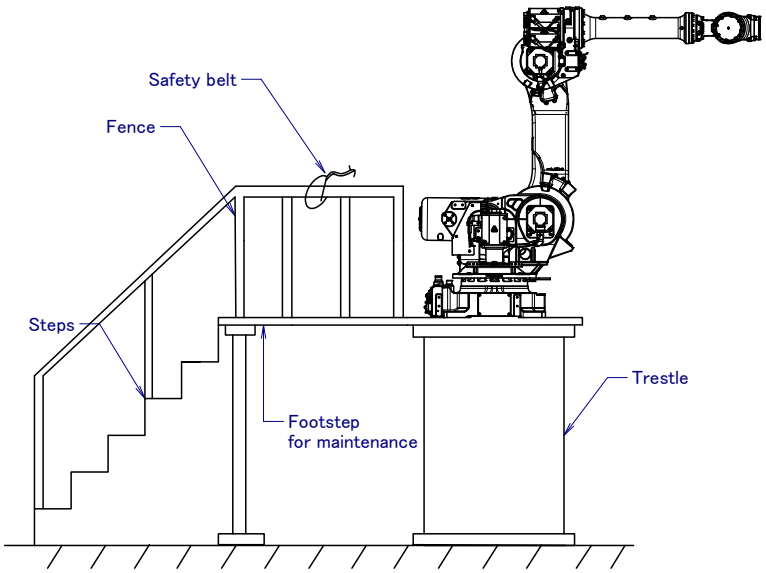

Fig.3 (c) Footstep for maintenance

3.1 OPERATOR SAFETY

The operator is a person who operates the robot system. In this sense, a worker who operates the teach pendant is also an operator. However, this section does not apply to teach pendant operators.

(1) If you do not have to operate the robot, turn off the power of the robot controller or press the EMERGENCY STOP button, and then proceed with necessary work.
(2) Operate the robot system at a location outside of the safety fence
(3) Install a safety fence with a safety gate to prevent any worker other than the operator from entering the work area unexpectedly and to prevent the worker from entering a dangerous area.
(4) Install an EMERGENCY STOP button within the operator's reach.

The robot controller is designed to be connected to an external EMERGENCY STOP button. With this connection, the controller stops the robot operation (Please refer to "STOP TYPE OF ROBOT" in SAFETY PRECAUTIONS for detail of stop type), when the external EMERGENCY STOP button is pressed. See the diagram below for connection.

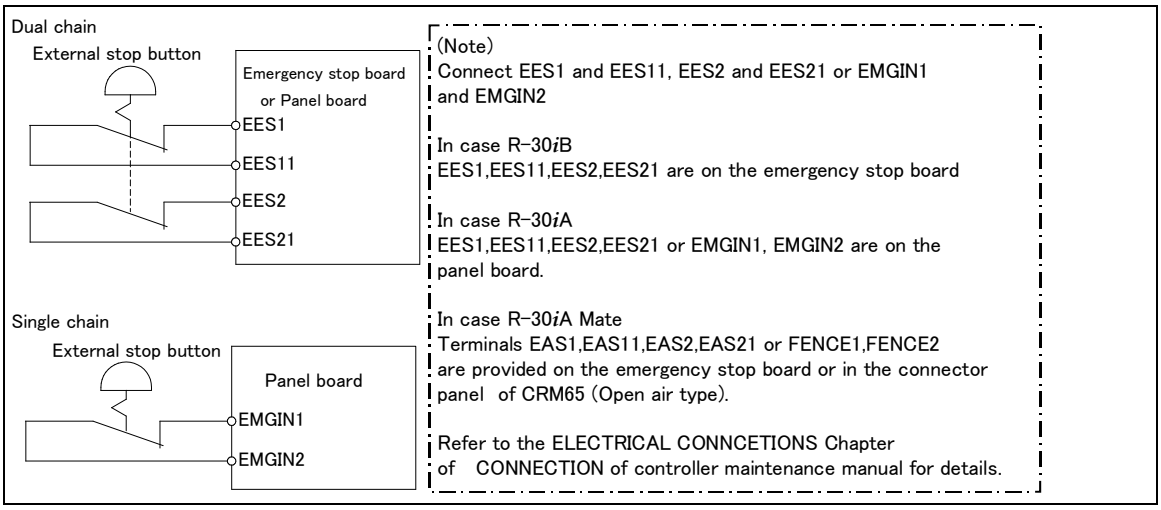

Fig.3.1 Connection diagram for external emergency stop button

3.2 SAFETY OF THE PROGRAMMER

While teaching the robot, the operator must enter the work area of the robot. The operator must ensure the safety of the teach pendant operator especially.

(1) Unless it is specifically necessary to enter the robot work area, carry out all tasks outside the area.
(2) Before teaching the robot, check that the robot and its peripheral devices are all in the normal operating condition.
(3) If it is inevitable to enter the robot work area to teach the robot, check the locations, settings, and other conditions of the safety devices (such as the EMERGENCY STOP button, the DEADMAN switch on the teach pendant) before entering the area.
(4) The programmer must be extremely careful not to let anyone else enter the robot work area.
(5) Programming should be done outside the area of the safety fence as far as possible. If programming needs to be done in the area of the safety fence, the programmer should take the following precautions:
   - Before entering the area of the safety fence, ensure that there is no risk of dangerous situations in the area.
   - Be prepared to press the emergency stop button whenever necessary.
   - Robot motions should be made at low speeds.
   - Before starting programming, check the entire system status to ensure that no remote instruction to the peripheral equipment or motion would be dangerous to the user.

Our operator panel is provided with an emergency stop button and a key switch (mode switch) for selecting the automatic operation mode (AUTO) and the teach modes (T1 and T2). Before entering the inside of the safety fence for the purpose of teaching, set the switch to a teach mode, remove the key from the mode switch to prevent other people from changing the operation mode carelessly, then open the safety gate. If the safety gate is opened with the automatic operation mode set, the robot stops (Please refer to "STOP TYPE OF ROBOT" in SAFETY PRECAUTIONS for detail of stop type). After the switch is set to a teach mode, the safety gate is disabled. The programmer should understand that the safety gate is disabled and is responsible for keeping other people from entering the inside of the safety fence. (In case of R-30*i*A Mate Controller standard specification, there is no mode switch. The automatic operation mode and the teach mode is selected by teach pendant enable switch.)

Our teach pendant is provided with a DEADMAN switch as well as an emergency stop button. These button and switch function as follows:
(1) Emergency stop button: Causes an emergency stop (Please refer to "STOP TYPE OF ROBOT" in SAFETY PRECAUTIONS for detail of stop type) when pressed.
(2) DEADMAN switch: Functions differently depending on the teach pendant enable/disable switch setting status.
   (a) Disable: The DEADMAN switch is disabled.
   (b) Enable: Servo power is turned off when the operator releases the DEADMAN switch or when the operator presses the switch strongly.
   Note) The DEADMAN switch is provided to stop the robot when the operator releases the teach pendant or presses the pendant strongly in case of emergency. The R-30*i*B/R-30*i*A/ R-30*i*A Mate employs a 3-position DEADMAN switch, which allows the robot to operate when the 3-position DEADMAN switch is pressed to its intermediate point. When the operator releases the DEADMAN switch or presses the switch strongly, the robot stops immediately.

The operator's intention of starting teaching is determined by the controller through the dual operation of setting the teach pendant enable/disable switch to the enable position and pressing the DEADMAN switch. The operator should make sure that the robot could operate in such conditions and be responsible in carrying out tasks safely.

The teach pendant, operator panel, and peripheral device interface send each robot start signal. However the validity of each signal changes as follows depending on the mode switch and the DEADMAN switch of the operator panel, the teach pendant enable switch and the remote condition on the software.

In case of R-30*i*B/R-30*i*A controller or CE or RIA specification of R-30*i*A Mate controller

Mode	Teach pendant enable switch	Software remote condition	Teach pendant	Operator panel	Peripheral device
AUTO mode	On	Local	Not allowed	Not allowed	Not allowed
		Remote	Not allowed	Not allowed	Not allowed
	Off	Local	Not allowed	Allowed to start	Not allowed
		Remote	Not allowed	Not allowed	Allowed to start
T1, T2 mode	On	Local	Allowed to start	Not allowed	Not allowed
		Remote	Allowed to start	Not allowed	Not allowed
	Off	Local	Not allowed	Not allowed	Not allowed
		Remote	Not allowed	Not allowed	Not allowed

T1,T2 mode: DEADMAN switch is effective.

In case of standard specification of R-30*i*A Mate controller

Teach pendant enable switch	Software remote condition	Teach pendant	Peripheral device
On	Ignored	Allowed to start	Not allowed
Off	Local	Not allowed	Not allowed
	Remote	Not allowed	Allowed to start

(6) (Only when R-30*i*B/R-30*i*A controller or CE or RIA specification of R-30*i*A Mate controller is selected.) To start the system using the operator's panel, make certain that nobody is the robot work area and that there are no abnormal conditions in the robot work area.

(7) When a program is completed, be sure to carry out a test run according to the procedure below.
   (a) Run the program for at least one operation cycle in the single step mode at low speed.
   (b) Run the program for at least one operation cycle in the continuous operation mode at low speed.
   (c) Run the program for one operation cycle in the continuous operation mode at the intermediate speed and check that no abnormalities occur due to a delay in timing.
   (d) Run the program for one operation cycle in the continuous operation mode at the normal operating speed and check that the system operates automatically without trouble.
   (e) After checking the completeness of the program through the test run above, execute it in the automatic operation mode.

(8) While operating the system in the automatic operation mode, the teach pendant operator should leave the robot work area.

3.3 SAFETY OF THE MAINTENANCE ENGINEER

For the safety of maintenance engineer personnel, pay utmost attention to the following.

(1) During operation, never enter the robot work area.

(2) A hazardous situation may arise when the robot or the system, are kept with their power-on during maintenance operations. Therefore, for any maintenance operation, the robot and the system should be put into the power-off state. If necessary, a lock should be in place in order to prevent any other person from turning on the robot and/or the system. In case maintenance needs to be executed in the power-on state, the emergency stop button must be pressed.

(3) If it becomes necessary to enter the robot operation range while the power is on, press the emergency stop button on the operator panel, or the teach pendant before entering the range. The maintenance personnel must indicate that maintenance work is in progress and be careful not to allow other people to operate the robot carelessly.

(4) When entering the area enclosed by the safety fence, the maintenance worker must check the entire system in order to make sure no dangerous situations exist. In case the worker needs to enter the safety area whilst a dangerous situation exists, extreme care must be taken, and entire system status must be carefully monitored.

(5) Before the maintenance of the pneumatic system is started, the supply pressure should be shut off and the pressure in the piping should be reduced to zero.
(6) Before the start of teaching, check that the robot and its peripheral devices are all in the normal operating condition.
(7) Do not operate the robot in the automatic mode while anybody is in the robot work area.
(8) When you maintain the robot alongside a wall or instrument, or when multiple workers are working nearby, make certain that their escape path is not obstructed.
(9) When a tool is mounted on the robot, or when any moving device other than the robot is installed, such as belt conveyor, pay careful attention to its motion.
(10) If necessary, have a worker who is familiar with the robot system stand beside the operator panel and observe the work being performed. If any danger arises, the worker should be ready to press the EMERGENCY STOP button at any time.
(11) When replacing a part, please contact FANUC service center. If a wrong procedure is followed, an accident may occur, causing damage to the robot and injury to the worker.
(12) When replacing or reinstalling components, take care to prevent foreign matter from entering the system.
(13) When handling each unit or printed circuit board in the controller during inspection, turn off the circuit breaker to protect against electric shock.
If there are two cabinets, turn off the both circuit breaker.
(14) A part should be replaced with a part recommended by FANUC. If other parts are used, malfunction or damage would occur. Especially, a fuse that is not recommended by FANUC should not be used. Such a fuse may cause a fire.
(15) When restarting the robot system after completing maintenance work, make sure in advance that there is no person in the work area and that the robot and the peripheral devices are not abnormal.
(16) When a motor or brake is removed, the robot arm should be supported with a crane or other equipment beforehand so that the arm would not fall during the removal.
(17) Whenever grease is spilled on the floor, it should be removed as quickly as possible to prevent dangerous falls.
(18) The following parts are heated. If a maintenance worker needs to touch such a part in the heated state, the worker should wear heat-resistant gloves or use other protective tools.
- Servo motor
- Inside the controller
- Reducer
- Gearbox
- Wrist unit

(19) Maintenance should be done under suitable light. Care must be taken that the light would not cause any danger.
(20) When a motor, reducer, or other heavy load is handled, a crane or other equipment should be used to protect maintenance workers from excessive load. Otherwise, the maintenance workers would be severely injured.
(21) The robot should not be stepped on or climbed up during maintenance. If it is attempted, the robot would be adversely affected. In addition, a misstep can cause injury to the worker.
(22) When performing maintenance work in high place, secure a footstep and wear safety belt.
(23) After the maintenance is completed, spilled oil or water and metal chips should be removed from the floor around the robot and within the safety fence.
(24) When a part is replaced, all bolts and other related components should put back into their original places. A careful check must be given to ensure that no components are missing or left not mounted.
(25) In case robot motion is required during maintenance, the following precautions should be taken :
- Foresee an escape route. And during the maintenance motion itself, monitor continuously the whole system so that your escape route will not become blocked by the robot, or by peripheral equipment.
- Always pay attention to potentially dangerous situations, and be prepared to press the emergency stop button whenever necessary.

(26) The robot should be periodically inspected. (Refer to the robot mechanical manual and controller maintenance manual.) A failure to do the periodical inspection can adversely affect the performance or service life of the robot and may cause an accident

(27) After a part is replaced, a test execution should be given for the robot according to a predetermined method. (See TESTING section of “Controller operator’s manual”.) During the test execution, the maintenance staff should work outside the safety fence.

4 SAFETY OF THE TOOLS AND PERIPHERAL DEVICES

4.1 PRECAUTIONS IN PROGRAMMING

(1) Use a limit switch or other sensor to detect a dangerous condition and, if necessary, design the program to stop the robot when the sensor signal is received.

(2) Design the program to stop the robot when an abnormal condition occurs in any other robots or peripheral devices, even though the robot itself is normal.

(3) For a system in which the robot and its peripheral devices are in synchronous motion, particular care must be taken in programming so that they do not interfere with each other.

(4) Provide a suitable interface between the robot and its peripheral devices so that the robot can detect the states of all devices in the system and can be stopped according to the states.

4.2 PRECAUTIONS FOR MECHANISM

(1) Keep the component cells of the robot system clean, and operate the robot in an environment free of grease, water, and dust.

(2) Don’t use unconfirmed liquid for cutting fluid and cleaning fluid.

(3) Employ a limit switch or mechanical stopper to limit the robot motion so that the robot or cable does not strike against its peripheral devices or tools.

(4) Observe the following precautions about the mechanical unit cables. When theses attentions are not kept, unexpected troubles might occur.
- Use mechanical unit cable that have required user interface.
- Don’t add user cable or hose to inside of mechanical unit.
- Please do not obstruct the movement of the mechanical unit cable when cables are added to outside of mechanical unit.
- In the case of the model that a cable is exposed, Please do not perform remodeling (Adding a protective cover and fix an outside cable more) obstructing the behavior of the outcrop of the cable.
- Please do not interfere with the other parts of mechanical unit when install equipments in the robot.

(5) The frequent power-off stop for the robot during operation causes the trouble of the robot. Please avoid the system construction that power-off stop would be operated routinely. (Refer to bad case example.) Please execute power-off stop after reducing the speed of the robot and stopping it by hold stop or cycle stop when it is not urgent. (Please refer to "STOP TYPE OF ROBOT" in SAFETY PRECAUTIONS for detail of stop type.)

(Bad case example)
- Whenever poor product is generated, a line stops by emergency stop.
- When alteration was necessary, safety switch is operated by opening safety fence and power-off stop is executed for the robot during operation.
- An operator pushes the emergency stop button frequently, and a line stops.

- An area sensor or a mat switch connected to safety signal operate routinely and power-off stop is executed for the robot.

(6) Robot stops urgently when collision detection alarm (SV050) etc. occurs. The frequent urgent stop by alarm causes the trouble of the robot, too. So remove the causes of the alarm.

5 SAFETY OF THE ROBOT MECHANISM

5.1 PRECAUTIONS IN OPERATION

(1) When operating the robot in the jog mode, set it at an appropriate speed so that the operator can manage the robot in any eventuality.

(2) Before pressing the jog key, be sure you know in advance what motion the robot will perform in the jog mode.

5.2 PRECAUTIONS IN PROGRAMMING

(1) When the work areas of robots overlap, make certain that the motions of the robots do not interfere with each other.

(2) Be sure to specify the predetermined work origin in a motion program for the robot and program the motion so that it starts from the origin and terminates at the origin.
Make it possible for the operator to easily distinguish at a glance that the robot motion has terminated.

5.3 PRECAUTIONS FOR MECHANISMS

(1) Keep the work areas of the robot clean, and operate the robot in an environment free of grease, water, and dust.

5.4 PROCEDURE TO MOVE ARM WITHOUT DRIVE POWER IN EMERGENCY OR ABNORMAL SITUATIONS

(1) For emergency or abnormal situations (e.g. persons trapped in or by the robot), brake release unit can be used to move the robot axes without drive power.
Please order following unit and cable.

Name	Specification
Brake release unit	A05B-2450-J350 (Input Voltage AC100-115V single-phase) A05B-2450-J351 (Input Voltage AC200-240V single-phase)
Robot connection cable	A05B-2450-J370 (5m) A05B-2450-J371 (10m)
Power cable	A05B-2525-J010 (5m) (AC100-115V Power plug) (*) A05B-2525-J011 (10m) (AC100-115V Power plug) (*) A05B-2450-J364 (5m) (No power plug) A05B-2450-J365 (10m) (No power plug)

(*) These do not support CE marking.

(2) Please make sure that adequate numbers of brake release units are available and readily accessible for robot system before installation.

(3) Regarding how to use brake release unit, please refer to Robot controller maintenance manual.

⚠NOTE
Robot systems installed without adequate number of brake release units or similar means are not in compliance with EN ISO 10218-1 and the Machinery Directive and therefore cannot bear the CE marking.

⚠CAUTION
Robot arm would fall down by releasing its brake because of gravity. Therefore it is strongly recommended to take adequate measures such as hanging Robot arm by a crane before releasing a brake.

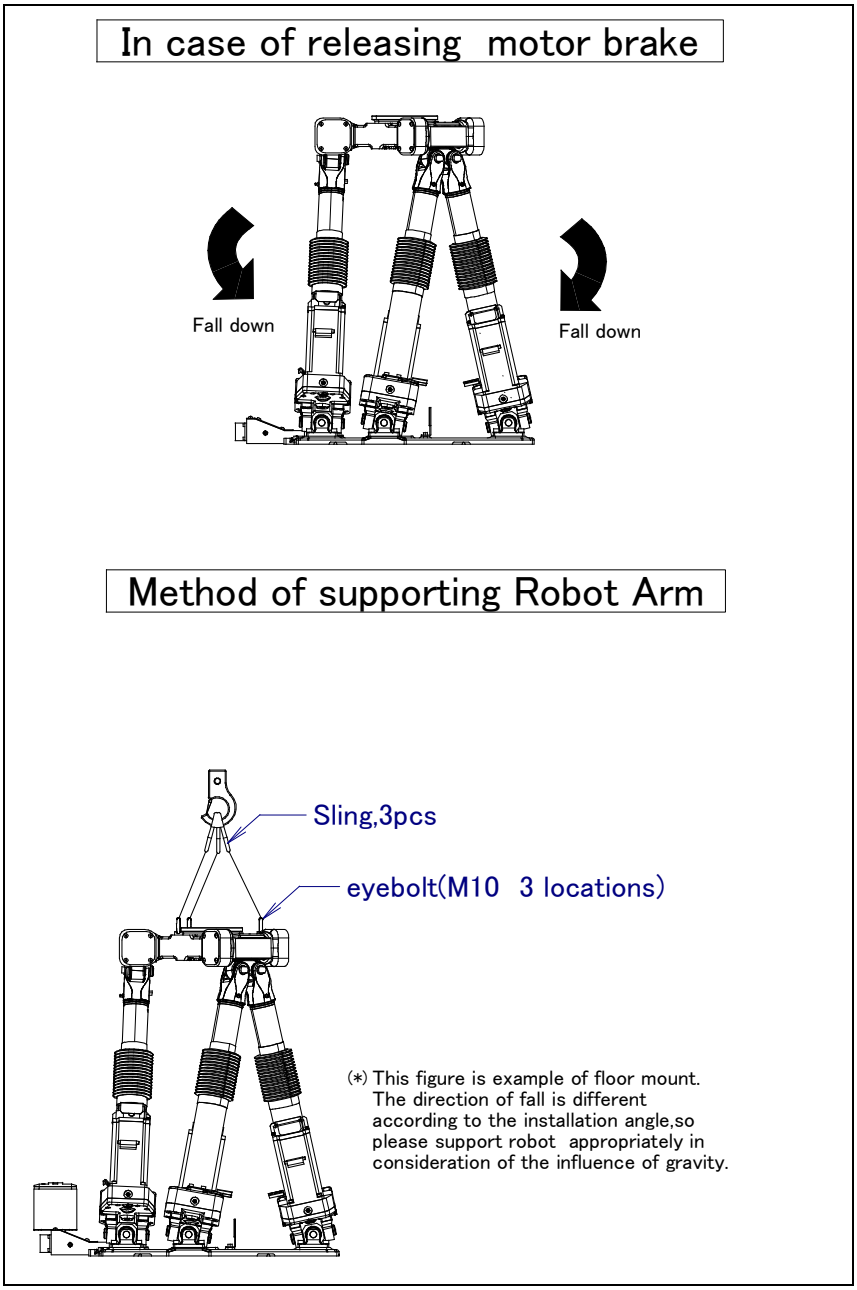

Fig. 5.4 Releasing J2 and J3 motor brake and measures

6 SAFETY OF THE END EFFECTOR

6.1 PRECAUTIONS IN PROGRAMMING

(1) To control the pneumatic, hydraulic and electric actuators, carefully consider the necessary time delay after issuing each control command up to actual motion and ensure safe control.
(2) Provide the end effector with a limit switch, and control the robot system by monitoring the state of the end effector.

7 STOP TYPE OF ROBOT

The following three robot stop types exist:

Power-Off Stop (Category 0 following IEC 60204-1)

Servo power is turned off and the robot stops immediately. Servo power is turned off when the robot is moving, and the motion path of the deceleration is uncontrolled.
The following processing is performed at Power-Off stop.
- An alarm is generated and servo power is turned off.
- The robot operation is stopped immediately. Execution of the program is paused.

Controlled stop (Category 1 following IEC 60204-1)

The robot is decelerated until it stops, and servo power is turned off.
The following processing is performed at Controlled stop.
- The alarm "SRVO-199 Controlled stop" occurs along with a decelerated stop. Execution of the program is paused.
- An alarm is generated and servo power is turned off.

Hold (Category 2 following IEC 60204-1)

The robot is decelerated until it stops, and servo power remains on.
The following processing is performed at Hold.
- The robot operation is decelerated until it stops. Execution of the program is paused.

> ⚠ **WARNING**
> The stopping distance and stopping time of Controlled stop are longer than the stopping distance and stopping time of Power-Off stop. A risk assessment for the whole robot system, which takes into consideration the increased stopping distance and stopping time, is necessary when Controlled stop is used.

When the emergency stop button is pressed or the FENCE is open, the stop type of robot is Power-Off stop or Controlled stop. The configuration of stop type for each situation is called *stop pattern*. The stop pattern is different according to the controller type or option configuration.

There are the following 3 Stop patterns.

Stop pattern	Mode	Emergency stop button	External Emergency stop	FENCE open	SVOFF input	Servo disconnect
A	AUTO	P-Stop	P-Stop	C-Stop	C-Stop	P-Stop
	T1	P-Stop	P-Stop	-	C-Stop	P-Stop
	T2	P-Stop	P-Stop	-	C-Stop	P-Stop
B	AUTO	P-Stop	P-Stop	P-Stop	P-Stop	P-Stop
	T1	P-Stop	P-Stop	-	P-Stop	P-Stop
	T2	P-Stop	P-Stop	-	P-Stop	P-Stop
C	AUTO	C-Stop	C-Stop	C-Stop	C-Stop	C-Stop
	T1	P-Stop	P-Stop	-	C-Stop	P-Stop
	T2	P-Stop	P-Stop	-	C-Stop	P-Stop

P-Stop: Power-Off stop
C-Stop: Controlled stop
-: Disable

The following table indicates the Stop pattern according to the controller type or option configuration.

Option	R-30*i*B
Standard	A (*)
Controlled stop by E-Stop (A05B-2600-J570)	C (*)

(*) R-30*i*B does not have servo disconnect.

Option	R-30*i*A				R-30*i*A Mate		
	Standard (Single)	Standard (Dual)	RIA type	CE type	Standard	RIA type	CE type
Standard	B (*)	A	A	A	A (**)	A	A
Stop type set (Stop pattern C) (A05B-2500-J570)	N/A	N/A	C	C	N/A	C	C

(*) R-30*i*A standard (single) does not have servo disconnect.
(**) R-30*i*A Mate Standard does not have servo disconnect, and the stop type of SVOFF input is Power-Off stop.

The stop pattern of the controller is displayed in "Stop pattern" line in software version screen. Please refer to "Software version" in operator's manual of controller for the detail of software version screen.

"Controlled stop by E-Stop" option

When "Controlled stop by E-Stop" (A05B-2600-J570) option (In case of R-30*i*A/R-30*i*A Mate, it is Stop type set (Stop pattern C) (A05B-2500-J570)) is specified, the stop type of the following alarms becomes Controlled stop but only in AUTO mode. In T1 or T2 mode, the stop type is Power-Off stop which is the normal operation of the system.

Alarm	Condition
SRVO-001 Operator panel E-stop	Operator panel emergency stop is pressed.
SRVO-002 Teach pendant E-stop	Teach pendant emergency stop is pressed.
SRVO-007 External emergency stops	External emergency stop input (EES1-EES11, EES2-EES21) is open. (R-30*i*A/R-30*i*B controller)
SRVO-194 Servo disconnect	Servo disconnect input (SD4-SD41, SD5-SD51) is open. (R-30*i*A controller)
SRVO-218 Ext. E-stop/Servo Disconnect	External emergency stop input (EES1-EES11, EES2-EES21) is open. (R-30*i*A Mate/R-30*i*B controller)
SRVO-408 DCS SSO Ext Emergency Stop	In DCS Safe I/O connect function, SSO[3] is OFF.
SRVO-409 DCS SSO Servo Disconnect	In DCS Safe I/O connect function, SSO[4] is OFF.

Controlled stop is different from Power-Off stop as follows:

- In Controlled stop, the robot is stopped on the program path. This function is effective for a system where the robot can interfere with other devices if it deviates from the program path.
- In Controlled stop, physical impact is less than Power-Off stop. This function is effective for systems where the physical impact to the mechanical unit or EOAT (End Of Arm Tool) should be minimized.
- The stopping distance and stopping time of Controlled stop is longer than the stopping distance and stopping time of Power-Off stop, depending on the robot model and axis. Please refer to the operator's manual of a particular robot model for the data of stopping distance and stopping time.

In case of R-30*i*A or R-30*i*A Mate, this function is available only in CE or RIA type hardware.

When this option is loaded, this function cannot be disabled.

The stop type of DCS Position and Speed Check functions is not affected by the loading of this option.

> ⚠ **WARNING**
> The stopping distance and stopping time of Controlled stop are longer than the stopping distance and stopping time of Power-Off stop. A risk assessment for the whole robot system, which takes into consideration the increased stopping distance and stopping time, is necessary when this option is loaded.

8 WARNING LABEL

(1) Greasing and degreasing label

Fig. 8 (a) Greasing and degreasing label

Description

When greasing and degreasing, observe the instructions indicated on this label.

1) Open the grease outlet at greasing.
2) Use a hand pump at greasing.
3) Use designated grease at greasing.

> **NOTE**
> See section I.3.2 " GREASE REPLACEMENT for explanations about specified greases, the amount of grease to be supplied, and the locations of grease and degrease outlets for individual models.

(2) Step-on prohibitive label

Fig. 8 (b) Step-on prohibitive label

Description

Do not step on or climb the robot or controller as it may adversely affect the robot or controller and you may get hurt if you lose your footing as well.

(3) High-temperature warning label

Fig. 8 (c) High-temperature warning label

Description

Be cautious about a section where this label is affixed, as the section generates heat. If you have to inevitably touch such a section when it is hot, use a protective provision such as heat-resistant gloves.

(4) Transportation label

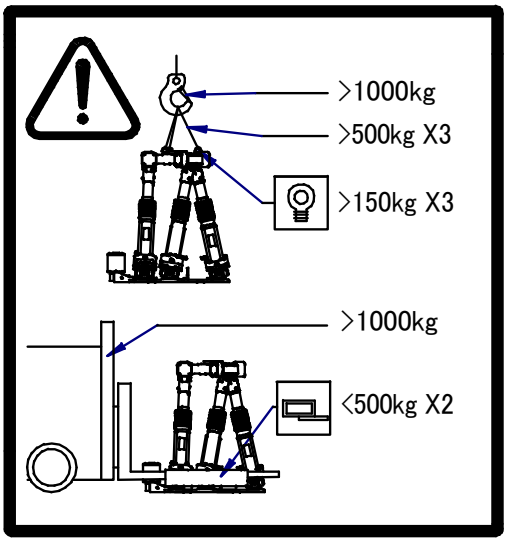

Fig. 8 (d) Transportation label

Description

When transporting the robot, observe the instructions indicated on this label.

1) Using a crane
   - Use a crane having a load capacity of 1000 kg or greater.
   - Use at least two slings each having a withstand load of 4900 N (500 kgf) or greater.
   - Use at least three eyebolts each having a withstand load of 1470 N (150 kgf) or greater.

2) Using a forklift
   - Use a forklift having a load capacity of 1,000 kg or greater.
   - Keep the total weight of the robot to be transported to within 1,000 kg because the withstand load of the forklift bracket (option) is 4,900 N (500 kgf).

NOTE
See section II.3.1 TRANSPORTATION for explanations about the posture a specific model should take when it is transported.

(3) Range of motion and payload mark label
Below label is added when CE specification is specified.

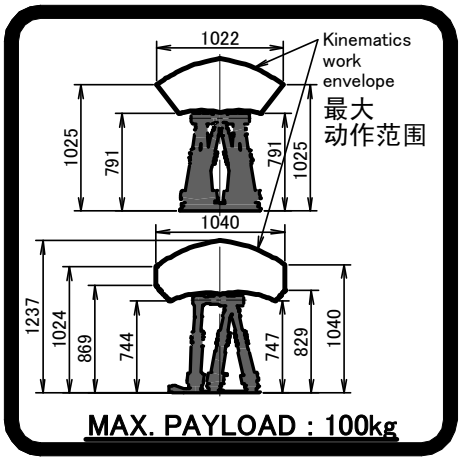

Fig.8 (e) Range of motion and payload mark label

PREFACE

This manual explains the maintenance and connection procedures for the mechanical units of the following robots:

Model name	Mechanical unit specification No.	Maximum load	controller
FANUC Robot F-200*i*B	A05B-1517-B211	100kg	R-J3*i*B
	A05B-1517-B221	100kg	R-30*i*A R-30*i*B

The label stating the mechanical unit specification number is affixed in the position shown below. Before reading this manual, determine the specification number of the mechanical unit.

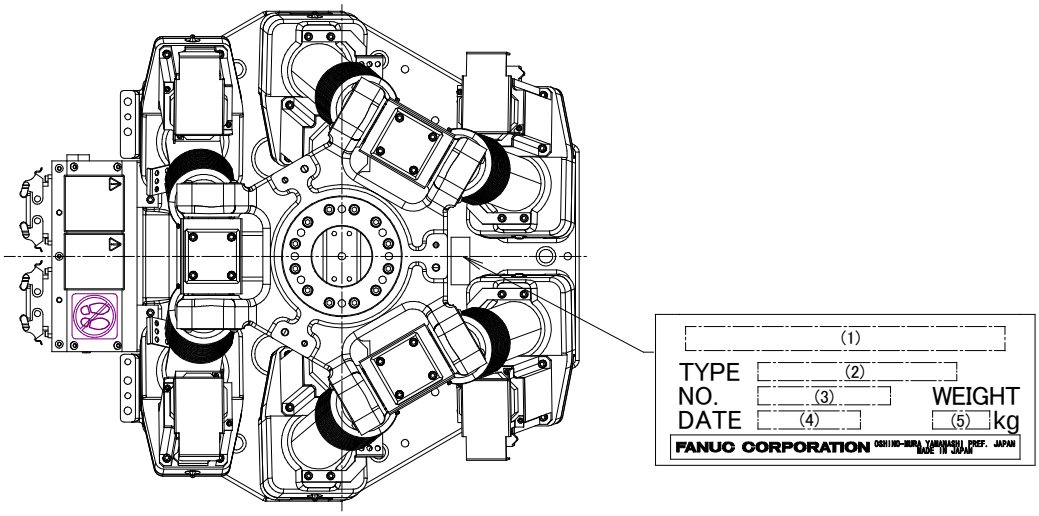

Position of label Indicating mechanical unit specification number

	(1)	(2)	(3)	(4)	(5)
CONTENTS	**MODEL NAME**	**TYPE**	**No.**	**DATE**	**WEIGHT**
LETTERS	FANUC Robot F-200*i*B	A05B-1517-B211 A05B-1517-B221	PRINT SERIAL NO	PRINT PRODUCTION YEAR AND MONTH	190kg

Specifications

Items	Specifications
Type	Stewart Platform type parallel-mechanism
Controlled axes	6 Axes (J1, J2, J3, J4, J5, J6)
Installation	Floor, Upside-down
Motion range (all axes are same)	431mm (660 to 1091)
Speed (Note 1)	Horizontal 1500mm/s Vertical 300mm/s
Max. load capacity	100kg
Allowable load moment at wrist	588N・m (60kgf・m)
Allowable load inertia at wrist	36kg・m^2 (367kgf・cm・s^2)
Drive method	Electric servo drive by AC servo motor
Repeatability	±0.1mm
Weight of mechanical unit	Approx. 190kg
Acoustic noise level	78.1dB This value is an A-load equivalent acoustic noise level measured according to ISO11201 (EN31201). The value is measured under the following conditions. - Maximum load and maximum speed - Automatic operation (AUTO mode)
Installation environment	Ambient temperature 0 to 45℃(No dew, nor frost allowed) (Note 2) Ambient humidity Normally : 75% RH or less Short term : MAX 95% RH (within one month) Vibration : 0.5G or less Free of corrosive gases (Note 3)

NOTE

1 The robot does not arrive maximum speed at the short movement distance.

2 When robot is used in low temperature environment that is near to 0ºC,or robot is not operated for a long time in the environment that is less than 0ºC in a holiday or the night, because viscous resistance of the drive train is so big that may cause occurrence of collision detect alarm (SRVO –050) etc. In this case, we recommend performing the warm up operation for several minutes.

3 Contact the service representative, if the robot is to be used in an environment or a place subjected to severe vibrations, heavy dust, cutting oil splash and or other foreign substances.

⚠CAUTION

Note that the cable in the mechanical part is different between the model supporting the R-J3*i*B controller and the model supporting the R-30*i*A/R-30*i*B controller.

RELATED MANUALS

For the FANUC Robot series, the following manuals are available:

Safety handbook B-80687EN All persons who use the FANUC Robot and system designer must read and understand thoroughly this handbook		Intended readers : All persons who use FANUC Robot, system designer Topics : Safety items for robot system design, operation, maintenance
R-J3*i*B controller	Setup and Operations manual SPOT TOOL B-81464EN-1 HANDLING TOOL B-81464EN-2 SEALING TOOL B-81464EN-4	Intended readers : Operator, programmer, maintenance person, system designer Topics : Robot functions, operations, programming, setup, interfaces, alarms Use : Robot operation, teaching, system design
	Maintenance manual B-81465EN B-81465EN-1 (For Europe)	Intended readers : Maintenance person, system designer Topics : Installation, connection to peripheral equipment, maintenance Use : Installation, start-up, connection, maintenance
R-30*i*A controller	Setup and Operations manual SPOT TOOL+ B-83124EN-1 HANDLING TOOL B-83124EN-2 DISPENSE TOOL B-83124EN-4 ALARM CODE LIST B-83124EN-6 SERVO GUN FUNCTION B-82634JA	Intended readers : Operator, programmer, maintenance person, system designer Topics : Robot functions, operations, programming, setup, interfaces, alarms Use : Robot operation, teaching, system design
	Maintenance manual Standard: B-82595EN RIA: B-82595EN-2 CE: B-82595EN-1 (European specification)	Intended readers : Maintenance person, system designer Topics : Installation, connection to peripheral equipment, maintenance Use : Installation, start-up, connection, maintenance

R-30*i*B controller	Operations manual (Basic Operation) B-83284EN Operations manual (Alarm Code List) B-83284EN-1 Operations manual (Optional Function) B-83284EN-2 SPOT WELDING FUNCTION Operations manual B-83284EN-4 DISPENSE TOOL FUNCTION Operations manual B-83284EN-5 Servo Gun Function Operations manual B-83264EN	Intended readers : Operator, programmer, maintenance person, system designer Topics : Robot functions, operations, programming, setup, interfaces, alarms Use : Robot operation, teaching, system design
	Maintenance manual B-83195EN	Intended readers : Maintenance person, system designer Topics : Installation, connection to peripheral equipment, maintenance Use : Installation, start-up, connection, maintenance
Mechanical unit	Maintenance manual FANUC Robot F-200*i*B B-81725EN	Intended readers : Maintenance person, system designer Topics : Installation, connection to the controller, maintenance Use : installation, start-up, connection, maintenance

TABLE OF CONTENTS

I. MAINTENANCE

1 CONFIGURATION

The configuration of the mechanical unit is shown in Fig.1.

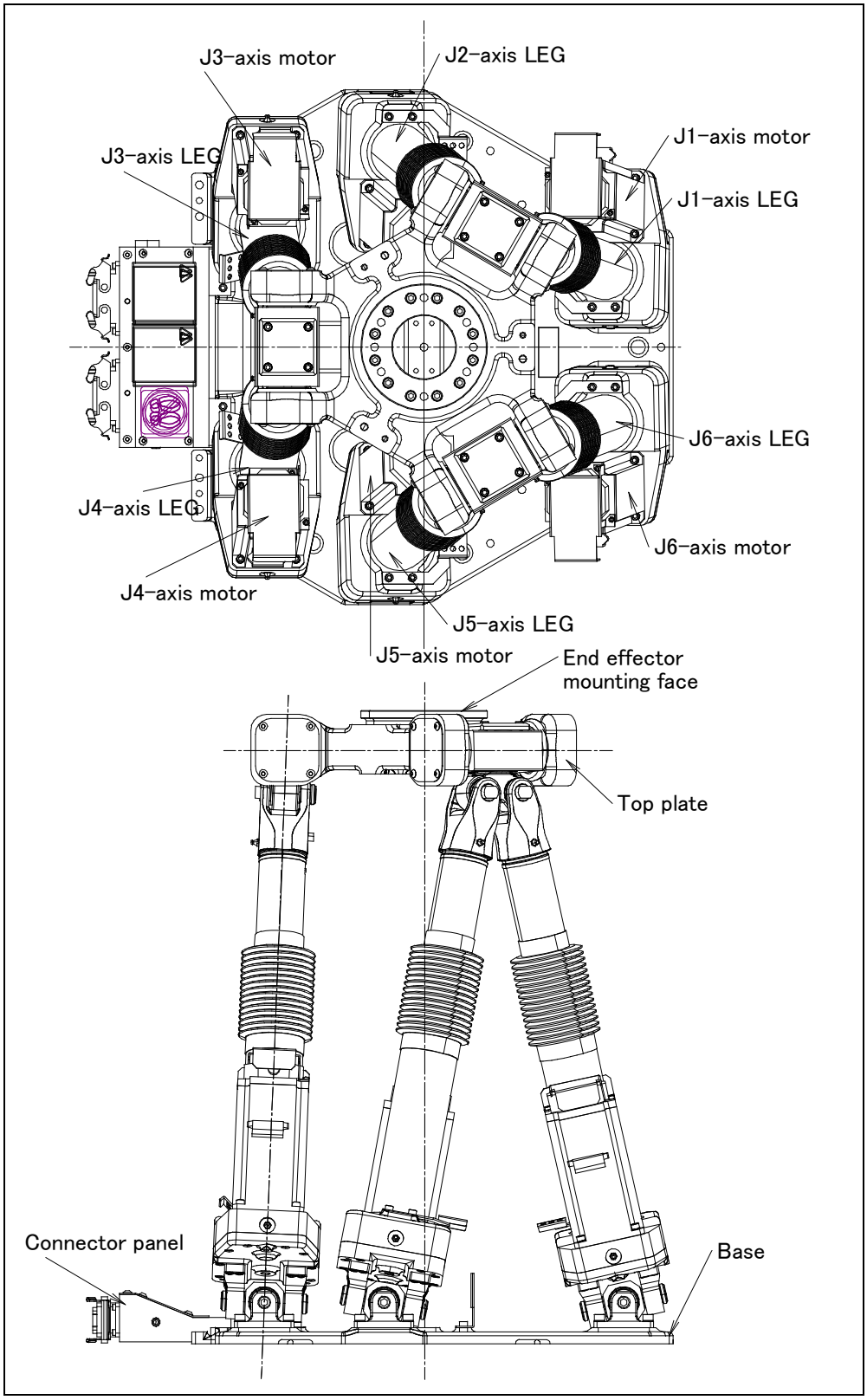

Fig.1 Mechanical unit configuration

1.1 DRIVE MECHANISM (J1 to J6)

Fig.1.1 shows the drive mechanism.
The mechanical unit is structured as follows: The rotation of the motor drives gear 2 via gear 1, so that the ball screw coupled with gear 2 is rotated.
By rotating the ball screw, the ball screw nut and the pipe coupled with the nut are driven in the axial direction.

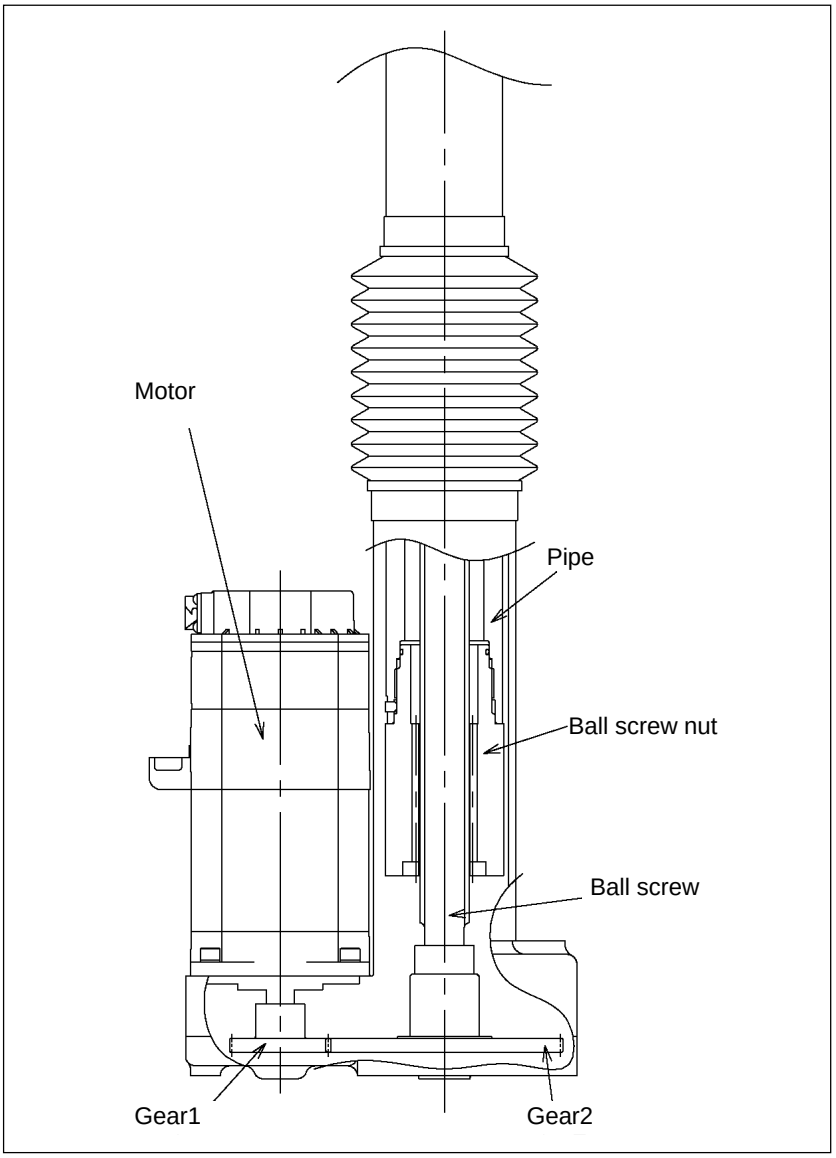

Fig.1.1 Drive mechanism

NOTE
All motors incorporate a brake that is applied when not energized.
These brakes are active at power-off and emergency stop.

2 PREVENTIVE MAINTENANCE

Optimum performance of the robot can be maintained for a long time by performing the periodic maintenance procedures presented in this chapter.

2.1 DAILY CHECKS

Clean each part, and visually check component parts for damage before daily system operation. Check the following items as the occasion demands.

1) Before turning on power

Item	Check items	Check points
1	Oil exudation	Check there is oil exudation on sealed part of each joint parts. (Note 1)

NOTE 1) About exudation of oil

Check items

- Check there is exudation of oil on sealed part of each joint parts.
- Oil exudation may be attached (Slightly a loot oil stick) to outside of lip depend on the movement condition or environment of the circumference. If this oil contents change to a state of dew, it may fail depend on the movement.
  You can prevent oil spot from falling down by wiping the oil contents which is accumulated to under part of oil seal before operation.
- Also, motors may become the high temperature and the internal pressure of grease bath or oil bath may rise by frequent repetition movement and use in the high temperature environment.
  In these cases, you can return internal pressure by releasing grease out let or oil outlet just after operation of robot. (When opening grease outlet or oil outlet, refer to Section 3.1 and pay attention grease or oil is not scattered.)

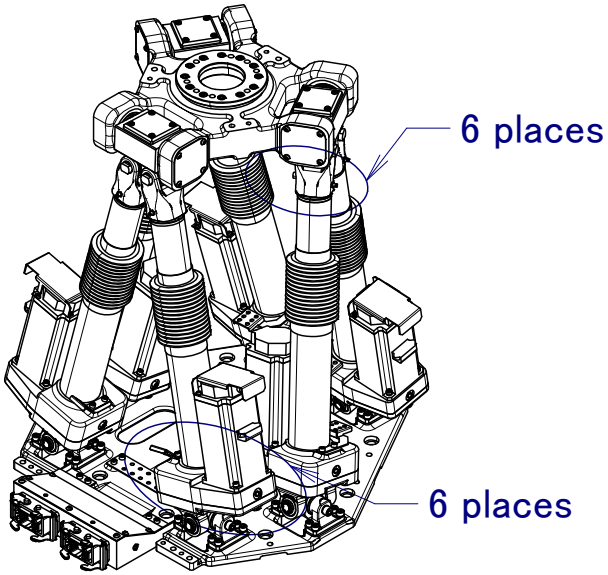

Fig2.1 (a) Check parts of main axis

Check items

Wipe off the oil contents of each joint part which has oil seal.

Item	Check items	Check points
1	Air pressure	Check air pressure using the pressure gauge on the air regulator as shown in Fig.2.1 (b). If it does not meet the specified pressure of 0.49 to 0.69 MPa (5-7 kgf/cm^2), adjust it using the regulator pressure setting handle.
2	Lubricator oil mist quantity	Check the drop quantity during wrist or hand motion. If it does not meet the specified value (1 drop/10-20 sec), adjust it using the lubricator control knob. Under normal usage the lubricator becomes empty in about 10 to 20 days under normal operation.
3	Lubricator oil level	Check to see that the lubricator level is within the specified level.
4	Leakage from hose	Check the joints, tubes, etc. for leaks. Repair leaks, or replace parts, as required.
5	Drain	Check drain and release it. When quantity of the drain is remarkable, examine the setting of the air dryer to the air supply side.

⚠ CAUTION
If the robot operates with foreign material accumulated around the joint, a malfunction or deformation may occur in the joint or leg unit.
It is recommended that the full cover option and cable cover options be used in an environment that suffers a large accumulation of foreign matters.

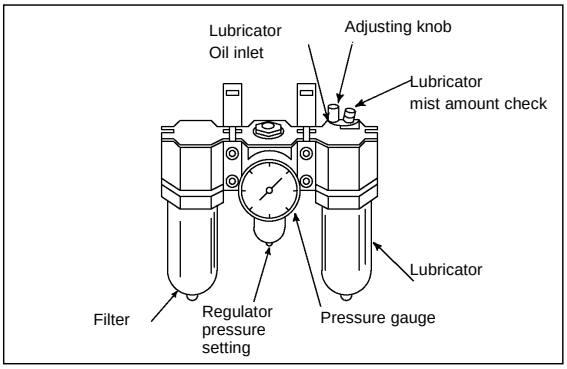

Fig.2.1 (b) Air control set (option)

2) After automatic operation

Item	Check items	Check points
1	Vibration, abnormal noises, and motor heating	Check whether the robot moves along and about the axes smoothly without unusual vibration or sounds. Also, check whether the temperature of the motors is excessively high.
2	Changing repeatability	Check to see that the stop positions of the robot have not deviated from the previous stop positions.
3	Peripheral devices for proper operation	Check whether the peripheral devices operate properly according to commands from the robot.
4	Brakes for each axis	Check that the end effector drops within 0.5 mm when the power is cut.

2.2 FIRST 1-MONTH (320 HOURS) CHECKS

Check the following items once every one-month (320 hours). Additional inspection areas and times should be added to the table according to the robot's working conditions, environment, etc. Then every 3 months thereafter. (See the Section 2.4.)

Item	Check items	Check points
1	Ventilation portion of controller	If the ventilation portion of the controller is dusty, turn off power and clean the unit.

2.3 FIRST 3-MONTH CHECKS (960 HOURS)

Check the following items at the first quarterly inspection, then every year thereafter.(See the Section 2.5.)

Item	Check items	Check points
1	Cables used in mechanical unit	Check whether the jackets of the mechanical unit cables are damaged. Also check whether the cables are excessively bent or unevenly twisted. Check that the connectors of the motors and connector panels are securely engaged. (Note 1)
2	Retightening external main bolts	Retighten the end-effecter mounting bolts and external main bolts.(Note 2)
3	Cleaning and checking each part	Clean each part (remove chips, etc.) and check component parts for cracks and flaws. (Note 3)
4	Check the end effector (hand) cable	Confirm whether there is wound in the cable.
5	Examination of the oil film on the ball screw	Stretch each leg, then remove the bellows. Examine whether the oil film on the ball screw has run out. If the legs cannot be stretched, remove the bellows and the bellow pipe for examination. (Note 4)
6	Check the teach pendant cable, operation box connecting cable and robot connecting cable	Check whether the cable connected to the teach pendant and robot is unevenly twisted.

NOTE 1) Inspection points and check items of the mechanical unit cables and connectors

Inspection points of the mechanical unit cables

Check the cable between connector plate to motor for damage.
Clean it when the spatter adheres.

Check items

For cables with a cable cover, open the cover before making the check.
Check the cables for a sheath break and wear.
If wires of the cable appear, replace it.

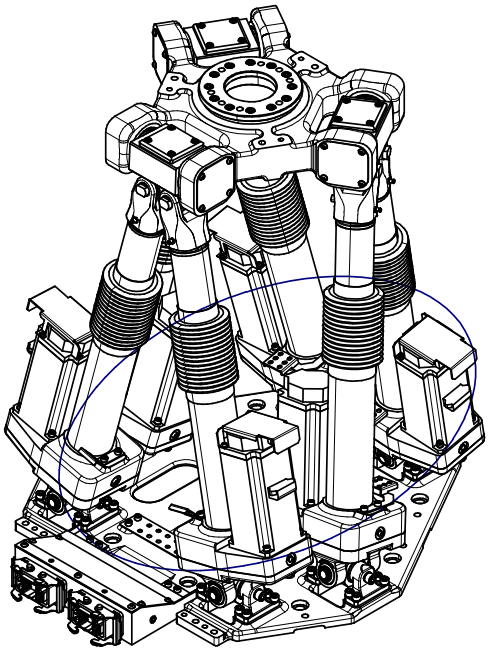

Fig. 2.3 (a) Inspection points of the mechanical unit cables

Inspection points of the connectors

- Power/brake connectors of the motor exposed externally
- Robot connection cables, earth terminal and user cables

Check items

- Circular connector: Check the connector for looseness by turning it manually.
- Square connector: Check the connector for disengagement of its lever.
- Earth terminal: Check the connector for looseness.

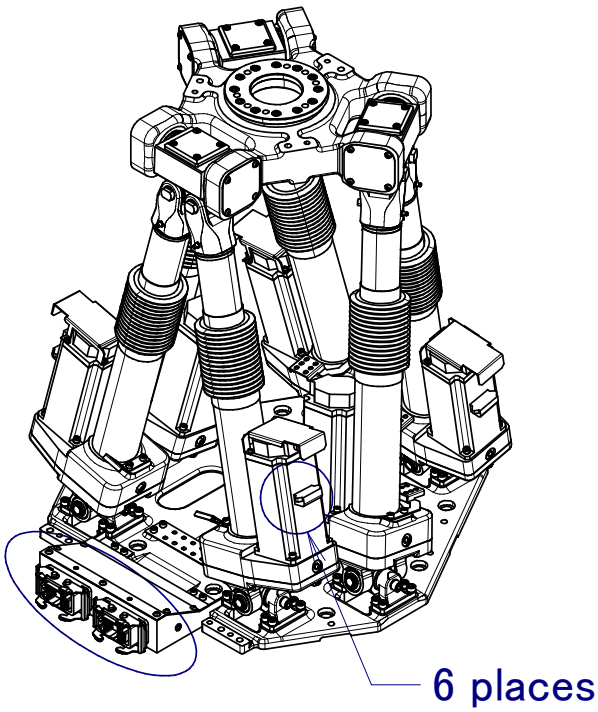

Fig. 2.3 (b) Inspection points of connectors

NOTE 2) Cleaning

- Check that there are not piling up of the spatter, peripheral equipment cable, and a big foreign body on the base. The leg unit runs aground when there is a foreign body on the base, and the ball screw might be damaged.
- Check if there is a trace of a collision around the gun or hand.
- Check the grease bath (6 locations) for an oil leak.

→ If oil can be found a day after wiping oil, an oil leak may be caused.

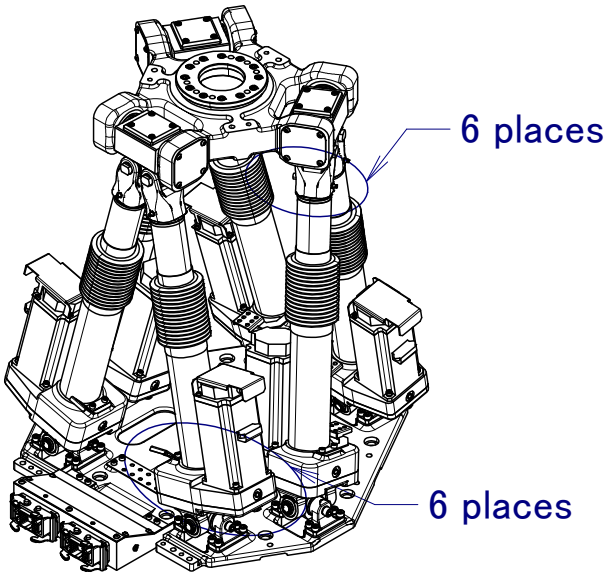

Fig. 2.3 (c) Cleaning points

NOTE 3) Points to be retightened

- The end effecter mounting bolts, robot installation bolts, and bolts to be removed for inspection need to be retightened.
- The bolts exposed to the outside of the robot need to be retightened.
  For the tightening torque, see the recommended bolt tightening torque shown in the Appendix.
  A loose prevention agent (adhesive) is applied to some bolts. If the bolts are tightened with greater than the recommended torque, the loose prevention agent may be removed. So, follow the recommended tightening torque when retightening them.

NOTE 4) Examination of the Oil Film on the Ball Screw

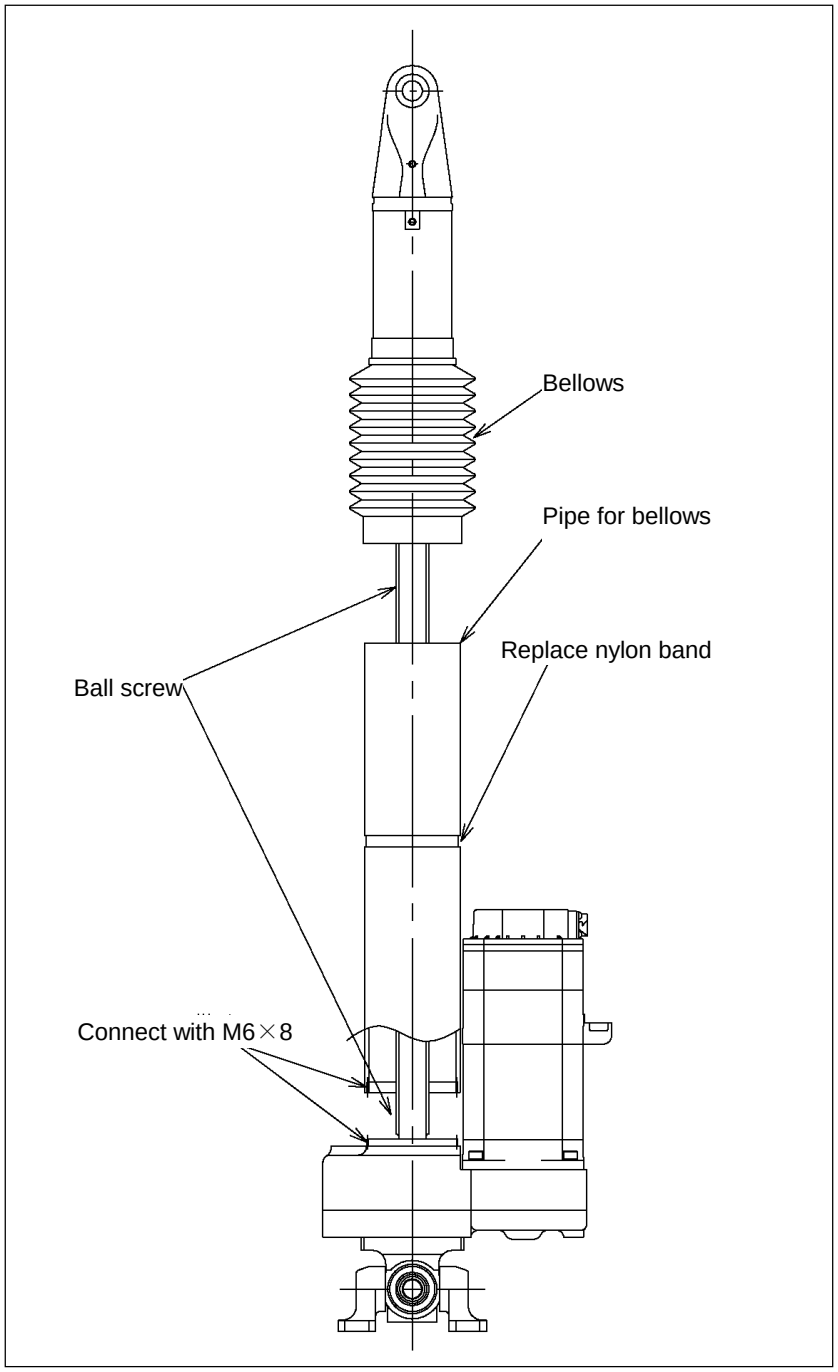

Fig.2.3 (d) Examination of the oil film on the ball screw

NOTE

It is permissible to use a heat gun to soften the sealant on the threads of the pipe where it connects to the gearbox. Upon reassembly, please apply sealant; LOCTITE gasket eliminator 518.

2.4 3-MONTH (960 HOURS) CHECKS

Check the following item at the first one-months (320 hours), then every 3-month thereafter. (See the Subsection 2.2.)

Item	Check items	Check points
1	Ventilation portion of controller	(See Section 2.2.)

2.5 6- MONTH CHECKS (1,920 HOURS)

Check the following item once every six months. (or 1,920 hours operating)

Item	Check items	Check points
1	Greasing of the ball screw	Grease the ball screw. (See Section 3.2.)

2.6 1-YEAR CHECKS (3,840 HOURS)

Check the following items once every year (3,840 hours).

Item	Check items	Check points
1	Cables used in mechanical unit	(See Section 2.3.)
2	Retightening external main bolts	(See Section 2.3.)
3	Cleaning each parts and inspection	(See Section 2.3.)
4	Check the end effector (hand) cable	(See Section 2.3.)
5	Check the robot cable, teach pendant cable and robot connecting cable	(See Section 2.3.)

2.7 1.5-YEAR CHECKS (5,760 HOURS)

Check the following item once every 1.5 year (5,760 hours).

Item	Check items	Check points
1	Battery	Replace battery in the mechanical unit. (See Section 3.3)

2.8 3-YEAR CHECKS (11,520 HOURS)

Check the following items once every 3 years (11,520 hours).

Item	Check items	Check points
1	Replacement of the grease in the gearbox	Replace the grease in the gearbox. (See Section 3.1.)

2.9 4-YEAR (15,360 HOURS) CHECKS

Check the following items once every 4 years (15,360 hours).

Item	Check items	Check points
1	Replace the mechanical unit cable	Replace mechanical unit cable (See Chapter 8.)

2.10 MAINTENANCE TOOLS

The following tools and instruments are required for the maintenance procedures contained in this manual.

1) Measuring instruments

Instruments	Accuracy/Capacity	Applications
Dial gauge accuracy	1/100 mm	Measurement of positioning.
Slide calipers	150 mm	

2) Tools

Cross-point(+)screwdrivers .....: Large, medium, and small sizes
Conventional(-)screwdrivers .....: Large, medium, and small sizes
Box screw driver .....: Dihedral width 2.5, 3, 5
Hex key set .....: Dihedral width 2.5, 3, 5, 6, 8, 10, 12, 14
Adjustable wrenches .....: Large, Medium and small sizes
Pliers
Cutting pliers
Cutting nippers
Double hexagon offset wrench
Torque wrench .....: M6 to M16
Grease gun
Eyebolt .....: M10
Rope.....: allowable weight more than 1 ton
LOCTITE 242
LOCTITE 262
LOCTITE .518 (Seal)
Seal tape
Gear puller
Separator
Flashlight

3 PERIODIC MAINTENANCE

3.1 REPLACING GREASE OF THE DRIVE MECHANISM

Replace the J1 to J6-axis gearbox grease in the cycle that is shorter among every three years and 11,520 hours by using the following procedures.

Table 3.1 Grease for 3-year periodical replacement

Supply position	Grease name	Quantity	Gun tip pressure
J1 to J6-axis gearbox	Kyodo yushi VIGOGREASE RE0 (Spec.: A98L-0040-0174#2KG)	Each 265 cm^3 (230g)	0.1 MPa or less (Note 1)

Note 1 When using a hand pump, apply grease approximately once per two seconds.

Posture at greasing

When replacing and replenishing grease, set the robot to a posture with about the same lengths on all axes.

Replacing procedure of grease

1 Remove the full cover (option) from the robot where applicable (see Section 6.5).
2 Turn off the controller power.
3 Remove the grease seal bolt.
4 Apply new grease from the grease inlet until it comes out from the grease outlet.
5 After applying grease, release the remaining pressure within the grease bath as described in the procedure in Section 3.2.
6 Remount the seal bolt at the grease outlet. (For mounting the seal bolt, coil a new seal tape.)
7 Remount the full cover (option) to the robot where applicable (see Section 6.5).

⚠CAUTION

If greasing is performed incorrectly, the internal pressure of the grease bath may suddenly increase, possibly causing damage to the seal, which would in turn lead to grease leakage and abnormal operation. When performing greasing, therefore, observe the following cautions.

1 Before starting to grease, open the grease outlet (remove the bolt from the grease outlet).
2 Supply grease slowly without applying excessive force, using a manual pump.
3 Whenever possible, avoid using a compressed-air pump, powered by the factory air supply. Even when using a compressed-air pump unavoidably, set the gun tip pressure (see Table 3.1) to 0.1 MPa or less during application of grease.
4 Use grease only of the specified type. Grease of a type other than that specified may cause problems.
5 After applying grease, release the remaining pressure within the grease bath as described in the procedure in Section 3.3.
6 To prevent accidents caused by slipping, completely remove any excess grease from the floor or robot.

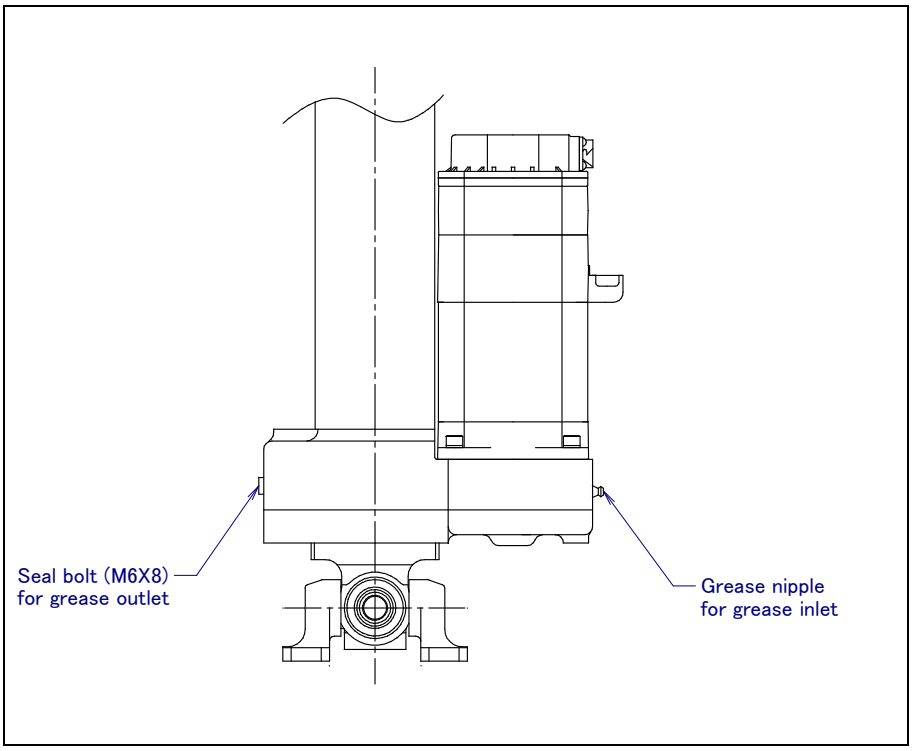

Fig.3.1 (a) Replacing grease of gearbox (J1,J3,J4,J6-axis)

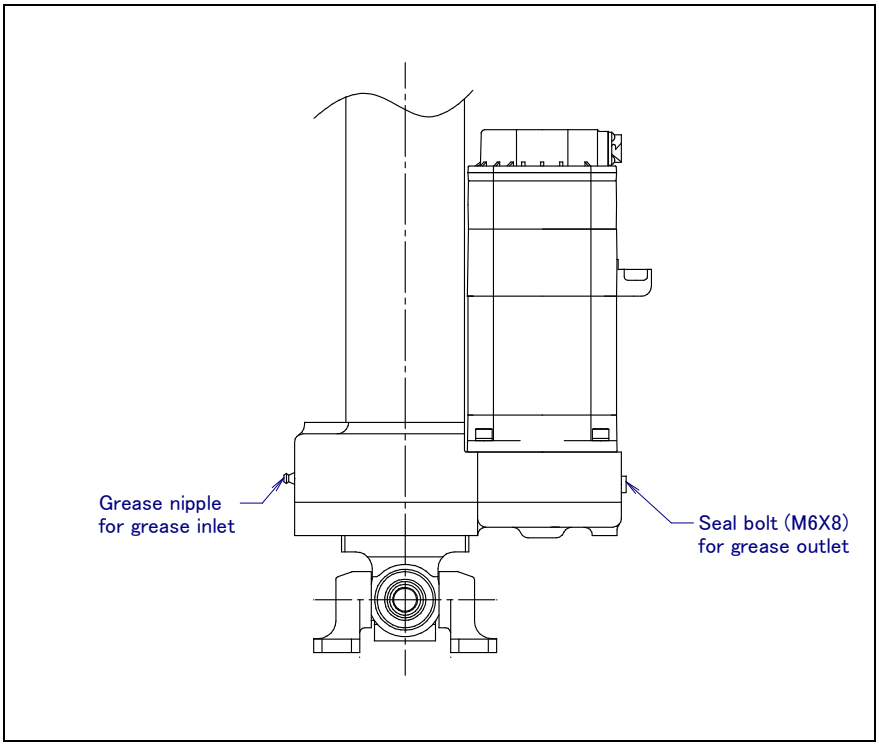

Fig.3.1 (b) Replacing grease of gearbox (J2,J5-axis)

When replacing or replenishing grease, posture the robot such that all axes are 668 mm or shorter. To replace or replenish grease when the robot is postured with the axes 668 mm or more long, remove the silencer (M5) and stuff the hole in advance.

3.2 GREASING THE BALL SCREW

Supply grease to the parts periodically. If the robot is installed in a severe environment, apply grease whenever necessary. If water splashes on the robot, apply grease immediately. Table 3.2 (a) shows greasing points. Table 3.2 (b) shows substitute greases.
After greasing, slowly make some 20 full-stroke (660 to 1091 mm) reciprocating motions of the ball screw, so that the grease is applied to the entire ball screw. If full-stroke motions are impossible, remove the bellows and the pipe for the bellows, then directly apply grease to the stroke portion of the ball screw.

Table 3.2 (a) Greasing points

Positions	Grease	Amount	Greasing interval
J1 to J6 axis ball screw	SHELL ALVANIA GREASE 2 (Spec: A97L-0001-0179#2)	100 cm^3 each	Date required

Table 3.2 (b) Substitutes for ALVANIA GREASE 2

Mobile Sekiyu K.K.	Mobilux grease No. 2
Esso Standard	Beacon No. 2
JX Nippon Oil & Energy Corporation	Multinoc 2
JX Nippon Oil & Energy Corporation	Epinoc AP-2
Idemitsu Kosan Co., Ltd.	Eponex grease No. 2
Cosmo Oil Co., Ltd.	Dynamax No. 2
Shell	Shell Gadus S2 V100 2

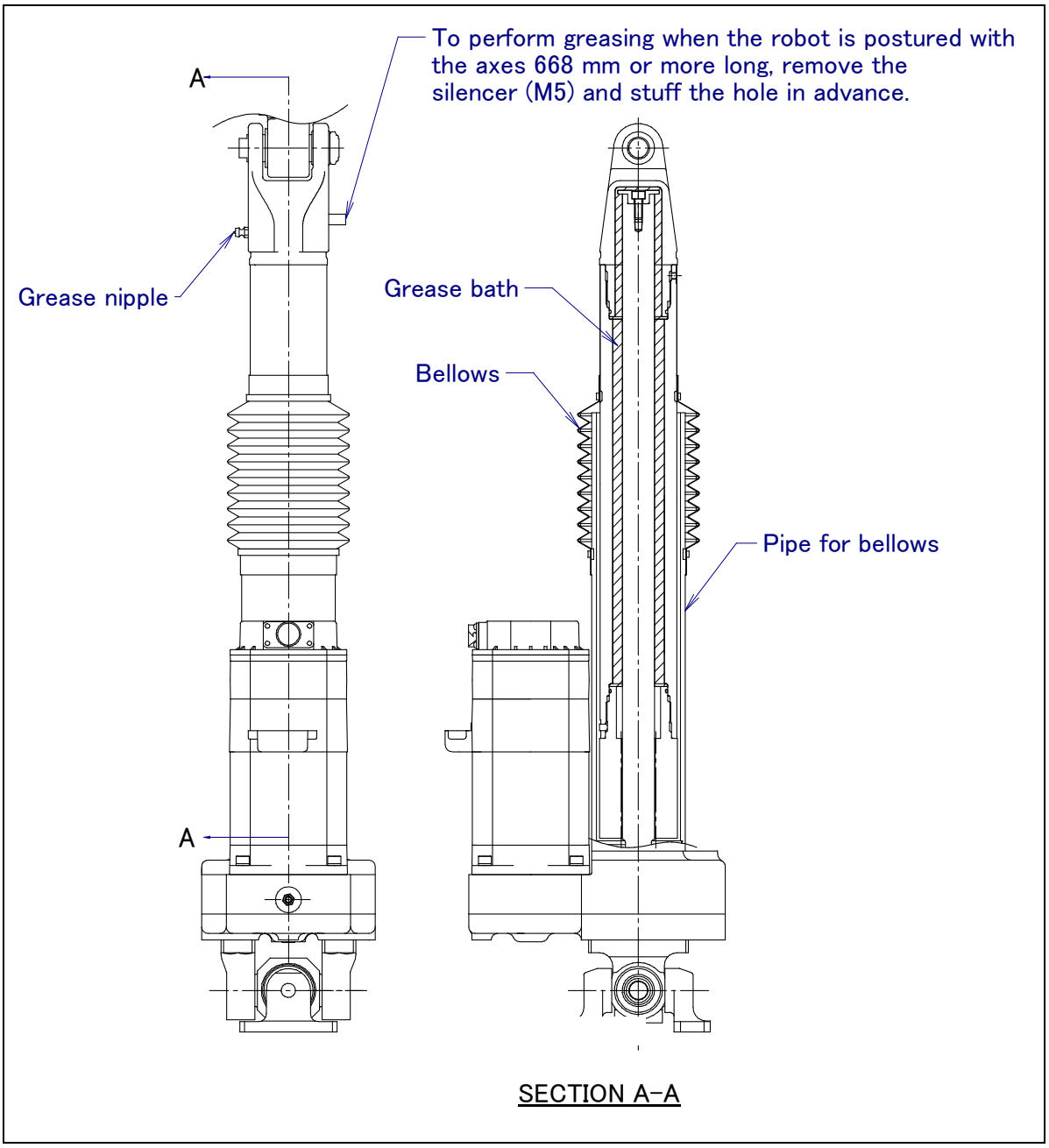

Fig.3.2 Greasing points

3.3 PROCEDURE FOR RELEASING THE GREASE REMAINING PRESSURE

After applying grease, operate the robot as instructed below with the seal bolt of the grease outlet uncapped to release the remaining pressure within the grease bath. Attach a recovery bag below the grease outlet to prevent output grease from splattering.

Perform program operation for the time specified below with the grease outlet uncapped in order to release the remaining pressure. Perform program operation for ten minutes or more by setting a position to 300 mm in the Z-axis direction and a repetition operation of OVR 100%.

When the above operation is impossible due to ambient conditions, perform the program operation for a time equivalent to the above. (When the maximum allowable movement distance is 150 mm, perform the

operation for 20 minutes or more.) Upon completion of the above operation, attach the seal bolt to the grease outlet. When reusing the seal bolt, be sure to seal it with seal tape.

3.4 REPLACING THE BATTERIES

The position data of each axis is preserved by the backup battery. The battery needs to be replaced every 1.5 year. Also use the following procedure for replacement when the backup battery voltage drop alarm occurs.

1 Keep the power on. Press the EMERGENCY STOP button to prohibit robot motion.
  Replacing the battery with the power supply turned off causes all position data to be lost. Therefore, mastering will be required again.
2 Remove the battery box cap.
3 Take out the old batteries from the battery box.
4 Insert new batteries into the battery box.
  Pay attention to the polarity of batteries.
5 Close the battery box cap.
6 Release the emergency stop.
7 Reset the controller.

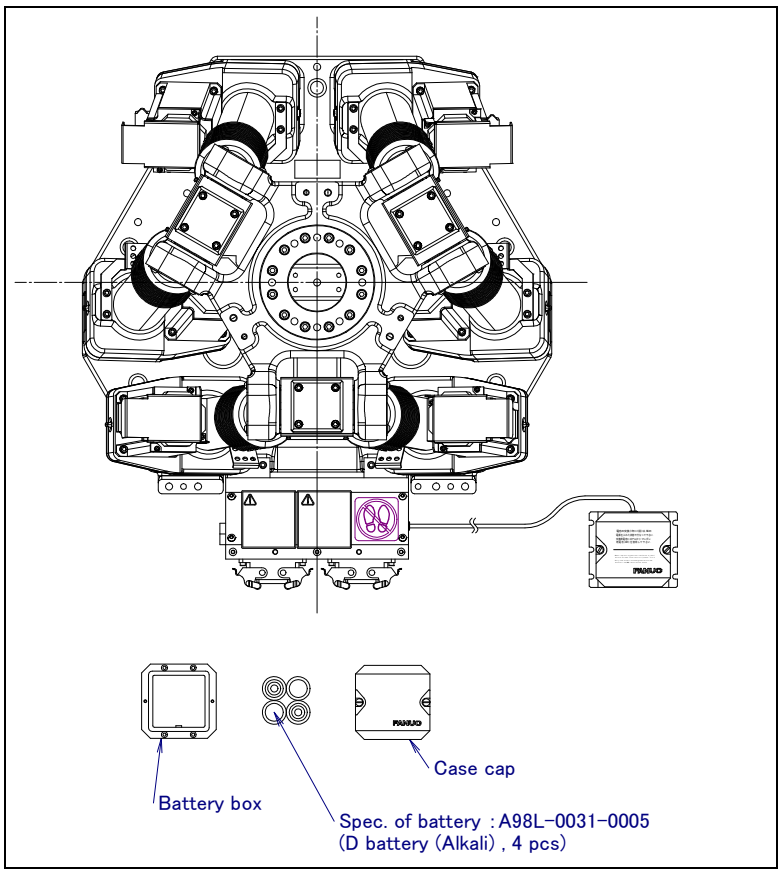

Fig.3.4 Replacing battery

4 TROUBLE SHOOTING

4.1 OVERVIEW

The cause of a failure in the mechanical unit may be difficult to localize, because failures can arise from many interrelated factors. If you fail to take the correct measures, the failure may be aggravated. So, it is necessary to analyze the symptoms of the failure precisely so that the true cause can be found.

4.2 FAILURE AND CAUSE AND MEASURES

Table 4.2 lists the major failures, causes and measures that may occur in the mechanical unit and their probable causes. If you cannot pinpoint a failure cause or are measure of which measures to apply, contact FANUC. If you have to replace components or make adjustments to repair the failure, see Sections 5, 6, and 8.

Table 4.2 Failures, causes and measures

Symptom	Description	Cause	Measure
Vibration Noise	- As the robot operates, its base plate lifts off the floor plate. - There is a gap between the floor plate and the plate securing the base plate of the robot. - There are cracks at the weld between the floor plate and the plate securing the base plate of the robot.	[Securing the plate securing the base plate of the robot to the floor plate] - A probable cause is that the weld between the floor plate and the plate securing the base plate of the robot is cracked, so that the plate is not secured properly to the floor plate. - If the plate securing the base plate of the robot is not secured properly to the floor plate, the plate will float during the operation of the robot, and the resulting impact will cause vibration.	- Re-weld the plate securing the base plate to the floor plate to secure it. - If the weld is not strong enough, increase its width and length.
	- During the operation of the robot, the base plate of the robot is floating from the plate securing the base plate. - There is a gap between the base plate of the robot and the plate securing it. - The bolts securing the base plate of the robot are loose.	[Securing the base plate of the robot] - A probable cause is that the base plate of the robot is not secured properly to the plate securing it. - Probable causes are loose bolts, the plate securing the base plate of the robot being not sufficiently flat, and foreign material being caught. - If the base plate of the robot is not secured properly to the plate securing it, the base plate will float from the plate during the operation of the robot, and the resulting impact will cause vibration.	- If a bolt is loose, apply LOCTITE and tighten it to the appropriate torque. - Modify the plate securing the base plate of the robot so that its flatness falls within the tolerance. - If there is any foreign material between the J1 base and base plate, remove it. - Apply adhesive between the base plate of the robot and the plate securing it.

Symptom	Description	Cause	Measure
Vibration Noise (Continu-ed)	- Vibration of rack or floor occurs when the robot is operating.	[Rack or floor] - It is likely that the rack or floor is not sufficiently rigid. -If the rack or floor is not sufficiently rigid, reaction from the robot deforms the rack or floor, leading to vibration.	- Reinforce the rack or floor to make it more rigid. - If it is impossible to reinforce the rack or floor, modify the robot control program; doing so might reduce the amount of vibration.
	- Vibration becomes more serious when the robot adopts a specific posture. - If the operating speed of the robot is reduced, vibration stops. - Vibration is most notice able when the robot is accelerating. - Vibration occurs when two or more axes operate at the same time.	[Overload] - It is likely that the load on the robot is greater than the maximum rating. - It is likely that the robot control program is too demanding for the robot hardware. - It is likely that the ACCELERATION value is excessive.	- Check the maximum load that the robot can handle once more. If the robot is found to be overloaded, reduce the load, or modify the robot control program. - Vibration in a specific portion can be reduced by modifying the robot control program while slowing the robot and reducing its acceleration (to minimize the influence on the entire cycle time).
	-Vibration or noise was first noticed after the robot collided with an object or the robot was overloaded for a long period. -The grease of the vibrating or noise occurring axis has not been exchanged for a long period.	[Broken gear, or bearing or ball screw] - It is likely that collision or overload applied an excessive force on the drive mechanism, thus damaging the gear tooth surface or rolling surface of a bearing. - It is likely that prolonged use of the robot while overloaded caused fretting of the gear tooth surface or rolling surface of a bearing due to resulting metal fatigue. - It is likely that foreign material caught in a gear, or bearing, caused damage on the gear tooth surface or rolling surface of the bearing. - It is likely that foreign material caught in a gear, bearing or ball screw cause vibration. - It is likely that, because the grease has not been changed for a long period, fretting occurred on the gear tooth surface or rolling surface of a bearing due to metal fatigue. These factors all generate cyclic vibration and noise.	- Operate one axis at a time to determine which axis is vibrating. - Find the source of the vibration while referring to the drive mechanism drawing of each axis given in the related maintenance manual. - Remove the motor, and check whether there are any fretting on a gear tooth surface. If any fretting is found, replace the gear. Note) Even a small amount of damage on a gear tooth surface can generate a large amount of noise. Therefore, it is necessary to check each gear tooth surface carefully. - Check whether any other gear in the drive mechanism is abnormal. - If there is foreign material caught in a gear, or if a gear tooth is missing, replace the gear. Also, remove all the grease from the gearbox and wash the inside of the gearbox. - After replacing the gear add an appropriate amount of grease. - If nothing changes after a gear is replaced, it is likely that a bearing or ball screw is damaged. - Using the robot within its maximum rating prevents problems with the drive mechanism. - Regularly changing the grease with a specified type - can help prevent problems.

Symptom	Description	Cause	Measure
Vibration Noise (Continu-ed)	- The cause of problem cannot be identified from examination of the floor, rack, or mechanical section.	[Controller, cable, and motor] - If a failure occurs in a controller circuit, preventing control commands from being supplied to the motor normally, or preventing motor information from being sent to the controller normally, vibration might occur. - If the Pulsecoder develops a fault, vibration might occur because information about the motor position cannot be transferred to the controller accurately. - If the motor becomes defective, vibration might occur because the motor cannot deliver its rated performance. - If a power line in a movable cable of the mechanical section has an intermittent break, vibration might occur because the motor cannot accurately respond to commands. - If a Pulsecoder wire in a movable part of the mechanical section has an intermittent break, vibration might occur because commands cannot be sent to the motor accurately. - If the controller is installed separately from the mechanical section, and a connection cable between them has an intermittent break, vibration might occur. - If the power source voltage drops below the rating, vibration might occur. - If a robot control parameter is set to an invalid value, vibration might occur.	- Refer to the Controller Maintenance Manual for troubleshooting related to the controller and amplifier. - Replace the Pulsecoder for the motor of the axis that is vibrating, and check whether the vibration still occurs. - Also, replace the motor of the axis that is vibrating, and check whether vibration still occurs. - Check that the robot is supplied with the rated voltage. - Check whether the sheath of the power cord is damaged. If so, replace the power cord, and check whether vibration still occurs. - Check whether the sheath of the cable connecting the mechanical section and controller is damaged. If so, replace the connection cable, and check whether vibration still occurs. - If vibration occurs only when the robot assumes a specific posture, it is likely that a cable in the mechanical unit is broken. - Shake the movable part cable while the robot is at rest, and check whether an alarm occurs. If an alarm or any other abnormal condition occurs, replace the mechanical unit cable. - Check that the robot control parameter is set to a valid value. If it is set to an invalid value, correct it. Contact FANUC for further information if necessary.
	- There is some relationship between the vibration of the robot and the operation of a machine near the robot.	[Noise from a nearby machine] - If the robot is not grounded properly, electrical noise is induced on the grounding wire, preventing commands from being transferred accurately, thus leading to vibration. - If the robot is grounded at an unsuitable point, its grounding potential becomes unstable, and noise is likely to be induced on the grounding line, thus leading to vibration.	- Connect the grounding wire firmly to ensure a reliable ground potential and prevent extraneous electrical noise.

Symptom	Description	Cause	Measure
Vibration Noise (Continued)	- There is an unusual sound after replacement of grease. - There is an unusual sound after a long period of time. - There is an unusual sound during operation at low speed.	- There may be an unusual sound when using other than the specified grease. - Even for the specified grease, there may be an unusual sound during operation at low speed immediately after replacement or after a long period of time.	- Use the specified grease. - When there is an unusual sound even for specified grease, perform operation for one or two days on an experiment. Generally, an usual sound will disappear.
Rattling	- While the robot is not supplied with power, pushing it with the hand causes part of the mechanical unit to wobble. - There is a gap on the mounting surface of the mechanical unit.	[Mechanical section coupling bolt] - It is likely that overloading or a collision has loosened a mounting bolt in the robot mechanical section.	Check that the following bolts for each axis are tight. If any of these bolts is loose, apply LOCTITE and tighten it to the appropriate torque. - Motor retaining bolt - Base retaining bolt - Joint-securing bolt - Gearbox-securing bolt - End effecter retaining bolt
	- The increase in backlash has become excessive. See table 4.2 (b).	[Increase in backlash] - It is likely that excessive force applied to the drive mechanism, due to a collision or overloading, has broken a gear resulting in an increase in the amount of backlash. - It is likely that prolonged use without changing the grease has caused the tooth surfaces of a gear to wear out, resulting in an increase in the amount of backlash. - A probable cause is that the tooth surface of the gear has worn out because of long-time use without the replacement of grease.	- Operate one axis at a time to determine which axis has the increased backlash. - Remove the motor, and check whether any of its gears are broken. If any gear is broken, replace it. - Check whether any other gear of the drive mechanism is damage. - If a gear tooth is missing, replace the relevant component. Also, remove all the grease from the gearbox and wash the inside of the gearbox. - After replacing the gear add an appropriate amount of grease. - Using the robot within its maximum rating prevents problems with the drive mechanism. - Regularly changing the grease with a specified type can help prevent problems.
	- There is lost motion in the bearing of a joint	[Damage to the bearing, release of the pre-load] - A probable cause is that excessive force was applied to the bearing of the joint due to impact or overload, damaging the bearing or releasing the pre-load.	- Check the movement of the joints during operation to identify the faulty joint. - Remove each leg, move the top and bottom joints manually to check whether the bearings are damaged and whether there is lost motion. If a bearing is damaged or the pre-load is released, replace the unit containing the joint. - This problem can be avoided by avoiding use at overload.

Symptom	Description	Cause	Measure
Motor overheating	- The ambient temperature of the installation location increases, causing the motor to overheat. - After a cover was attached to the motor, the motor overheated. - After the robot control program or the load was changed, the motor overheated.	[Ambient temperature] - It is likely that a rise in the ambient temperature prevented the motor from releasing heat efficiently, thus leading to overheating. [Operating condition] - It is likely that the robot was operated with the maximum average current exceeded.	The teach pendant can be used to monitor the average current. Check the average current when the robot control program is running. The allowable average current is specified for the robot according to its ambient temperature. Contact FANUC for further information. - Relaxing the robot control program and conditions can reduce the average current, thus preventing overheating. - Reducing the ambient temperature is the most effective means of preventing overheating. - Having the surroundings of the motor well ventilated enables the motor to release heat efficiently, thus preventing overheating. Using a fan to direct air at the motor is also effective. - If there is a source of heat near the motor, it is advisable to install shielding to protect the motor from heat radiation.
	- After a control parameter was changed, the motor overheated.	[Parameter] - If data input for a workpiece is invalid, the robot cannot be accelerated or decelerated normally, so the average current increases, leading to overheating.	- Input an appropriate parameter as described in the manual.
	- Symptom other than stated above	[Mechanical section problems] - It is likely that problems occurred in the mechanical unit drive mechanism, thus placing an excessive load on the motor. [Motor problems] - It is likely that a failure of the motor brake resulted in the motor running with the brake applied, thus placing an excessive load on the motor. - It is likely that a failure of the motor prevented it from delivering its rated performance, thus causing an excessive current to flow through the motor.	Repair the mechanical unit while referring to the above descriptions of vibration, noise, and rattling. - Check that, when the servo system is energized, the brake is released. - If the brake remains applied to the motor all the time, replace the motor. - If the average current falls after the motor is replaced, it indicates that the first motor was faulty.

Symptom	Description	Cause	Measure
Grease leakage	- Grease is leaking from the mechanical unit.	[Poor sealing] - Probable causes are a crack in the casting, a broken O-ring, a damaged oil seal, or a loose seal bolt. - A crack in a casting can occur due to excessive force that might be caused in collision. - An O-ring can be damaged if it is trapped or cut during disassembling or re-assembling. - An oil seal might be damaged if extraneous dust scratches the lip of the oil seal. - A loose seal bolt might allow grease to leak along the threads. - Problems with the grease nipple or threads.	- If a crack develops in the casting, sealant can be used as a quick-fix to prevent further grease leakage. However, the component should be replaced as soon as possible, because the crack might extend. - O-rings are used in the locations listed below. Refer to the relevant parts manual for detailed descriptions of their replacement. - Motor-fastening section - Ball screw nut connection section - Pipe connection section - Oil seals are used in the locations stated below. Refer to the relevant parts manual for detailed descriptions of their replacement. - Joint on the top plate - Joint on the base plate - Gearbox - Seal bolts are used in the locations stated below. Refer to the relevant parts manual for detailed descriptions of their replacement. - Joint connection section in the gearbox - Grease outlet - Replace the grease nipple.
Dropping axis	- An axis drops because the brake does not function. - An axis drops gradually when it should be at rest.	[Brake drive relay and motor] - It is likely that brake drive relay contacts are stuck to each other to keep the brake current flowing, thus preventing the brake from operating when the motor is deenergized. - It is likely that the brake shoe has worn out or the brake main body is damaged, preventing the brake from operating efficiently. - It is likely that oil or grease has entered the motor, causing the brake to slip. [Overload] -A probable cause is that a load exceeding the tolerance of the robot is mounted.	- Check whether the brake drive relay contacts are stuck to each other, as explained in the relevant manual. If they are found to be stuck, replace the relay. - If the brake shoe is worn out, if the brake main body is damaged, or if oil or grease has entered the motor, replace the motor. - Check the load tolerance of the robot. If the tolerance is exceeded, reduce the load.
Displacement	- The robot operates at a point other than the taught position. - The repeatability is not within the tolerance.	[Mechanical section problems] - If the repeatability is unstable, probable causes are a failure in the drive mechanism or a loose bolt. - If the repeatability becomes stable it is likely that a collision imposed an excessive load, leading to slipping on the base surface or the mating surface of an arm.	- If the repeatability is unstable, repair the mechanical section by referring to the above descriptions of vibration, noise, and rattling. - If the repeatability is stable, correct the taught program. Variation will not occur unless another collision occurs.

Symptom	Description	Cause	Measure
Displacement	- Displacement occurs only in a specific peripheral unit.	[Peripheral unit displacement] - It is likely that an external force was applied to the peripheral unit, thus shifting its position relative to the robot.	- Correct the setting of the peripheral unit position. - Correct the taught program.
	- Displacement occurred after a parameter was changed.	[Parameter] - It is likely that the mastering data was rewritten in such a way that the robot origin was shifted. - A failure in the Pulsecoder is considered.	- Re-enter the previous mastering data, which is known to be correct. - If correct mastering data is unavailable, perform mastering again. - When a failure is found in the Pulsecoder, replace the motor or Pulsecoder.
BZAL alarm occurred	- BZAL is displayed on the controller screen	- The voltage of the memory backup battery is low. - The pulse coder cable is defected.	- Replace the battery. - Replace the cable.

4.3 BACKLASH

Measure the backlash with one of the following methods.

Manual measurement method

1 Maintain the robot in a specified posture. (See Table 4.3 .)
2 Apply positive and negative loads to each axis as shown in Fig.4.2.1 (a).
3 Remove the loads and measure the displacement.

Measure backlash by applying positive and negative loads to each axis three times. Average the values measured in the last two measurements for each axis, and use the averages as a measured backlash for the respective axes.

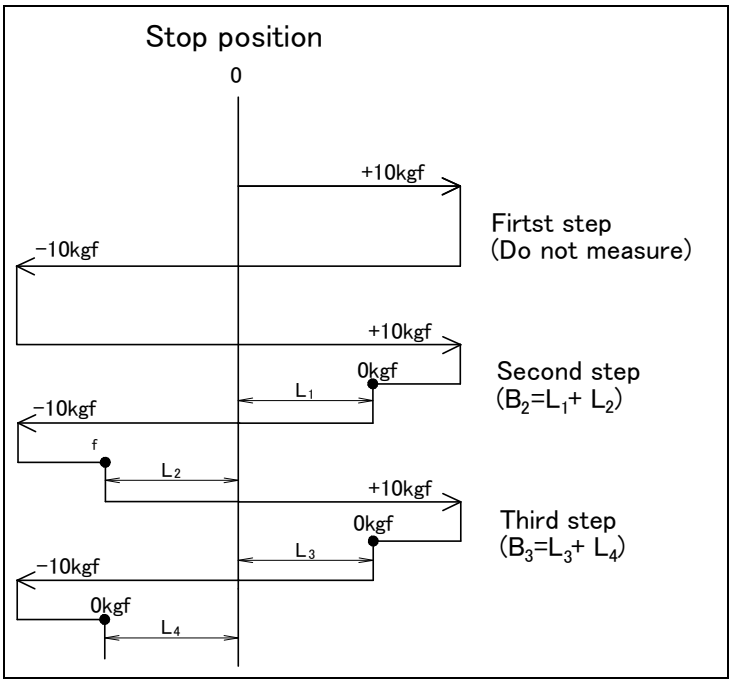

Fig.4.3(a) Backlash measurement method

Backlash B is calculated using the following expression:

$$B = \frac{B_2 + B_3}{2}$$

Table 4.3 Measurement posture/Backlash permissible value

Direction	Load	Posture						Permissible value (mm)
		X	Y	Z	W	P	R	
R	±10kg	200	200	1135	0	0	0	0.3

Automatic measurement method

The reciprocating motion of the R-axis is performed with an angle of 0.3° or more and the difference between this position and the return position is measured.
Measurement is made twice and their average is obtained as the measurement value.

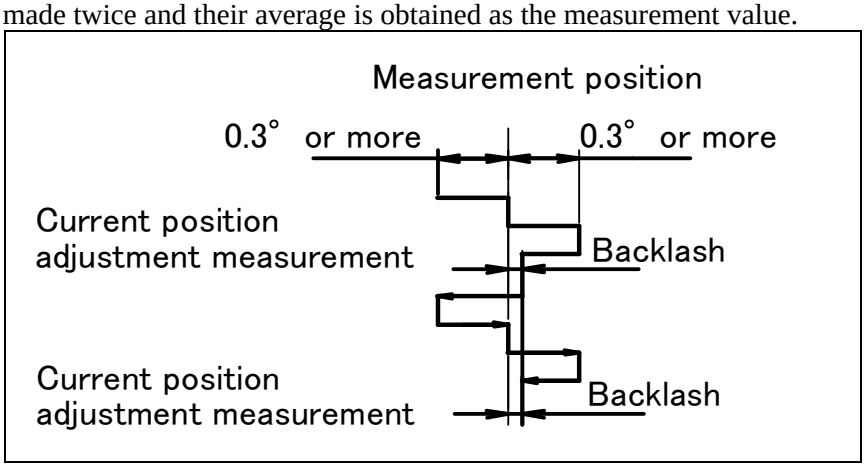

	Controller
Teach speed	Each axis 25%
Override	4%

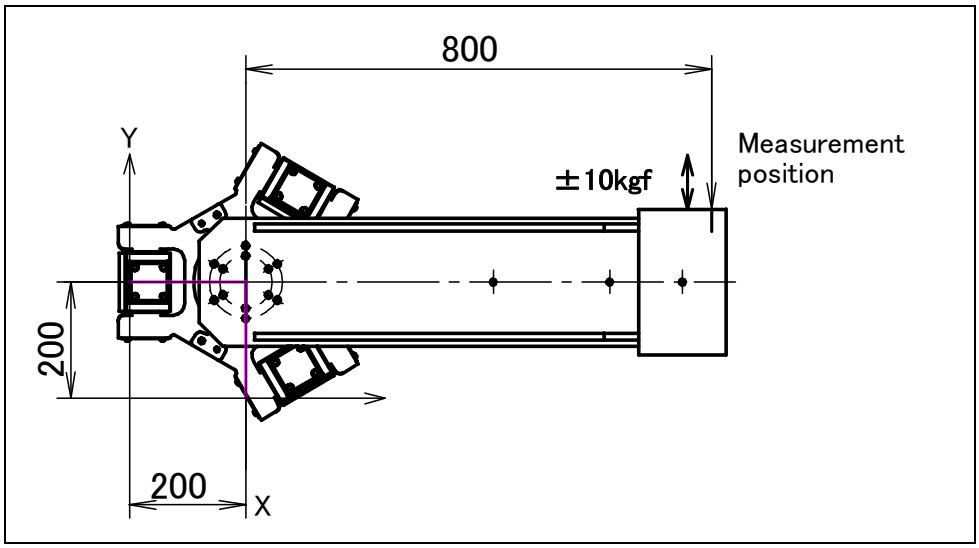

Fig. 4.3 (b) Measurement position
(common to automatic measurement and manual measurement)

5 ADJUSTMENTS

Each part of the mechanical unit is carefully adjusted at the factory before shipment. Therefore it is usually unnecessary for the customer to make adjustments at the time of delivery. However, after for a long period of use or after parts are replaced, adjustments may be required.

5.1 MASTERING

Mastering is an operation performed to associate the angle of each robot axis with the pulse count value supplied from the absolute Pulsecoder connected to the corresponding axis motor. To be specific, mastering is an operation for obtaining the pulse count value corresponding to the zero position.

5.1.1 General

The current position of the robot is determined according to the pulse count value supplied from the Pulsecoder on each axis.
Mastering is factory-performed. It is unnecessary to perform mastering in daily operations. However, mastering becomes necessary after:

- Motor replacement.
- Pulsecoder replacement.
- Cable replacement.
- Batteries for pulse count backup in the mechanical unit have gone dead.

> ⚠**NOTE**
> Robot data (including mastering data) and Pulsecoder data are backed up by their respective backup batteries. Data will be lost if the batteries go dead. Replace the batteries in the control and mechanical units periodically. An alarm will be issued to warn the user of a low battery voltage.

Mastering method

Table 5.1.1 Types of mastering

Fixture position mastering	In the F-200*i*B, this function is not used.
Zero-position mastering (witness mark mastering)	A marking is provided for each axis of the robot. Mastering is performed by moving the robot to the marking positions on all axes. In the F-200*i*B, marking is performed at the position of 668 mm on all axes.
Quick mastering	This is performed at a user-specified position. The corresponding count value is obtained from the rotation speed of the Pulsecoder connected to the relevant motor and the rotation angle within one rotation. Quick mastering uses the fact that the absolute value of a rotation angle within one rotation will not be lost.
Single axis mastering	This is performed for one axis at a time. The mastering position for each axis can be specified by the user. It is effective for mastering for a specific axis only. In the F-200*i*B, this function is used for mastering by the use of a fixture.
Mastering data entry	Mastering data is entered directly.

Once mastering is performed, it is necessary to carry out positioning, or calibration. Positioning is an operation in which the controller reads the current pulse count value to sense the current position of the robot.

> ⚠**NOTE**
> If mastering is performed incorrectly, the robot may behave unexpectedly. This is very dangerous. So, the positioning screen is designed to appear only when the $MASTER_ENB system variable is 1 or 2. After performing positioning, press F5 [DONE] on the positioning screen. The $MASTER_ENB system variable is reset to 0 automatically, thus hiding the positioning screen.

5.1.2 Resetting Alarms and Preparing for Mastering

Before performing mastering because a motor is replaced, it is necessary to release the relevant alarm and display the positioning menu.

Alarm displayed

"Servo 062 BZAL" or "Servo 075 Pulse not established"

Procedure

1 Display the positioning menu by following steps 1 to 6.
   1 Press the screen selection key.
   2 Press [0 NEXT] and select [6 SYSTEM].
   3 Press F1 [TYPE], and select [SYSTEM Variable] from the menu.
   4 Place the cursor on $MASTER_ENB, then key in "1" and press [ENTER].
   5 Press F1 [TYPE], and select[Master/Cal] from the menu.
   6 Select the desired mastering type from the [Master/Cal] menu.

2 To reset the "Servo 062 BZAL" alarm, follow steps 1 to 5.
   1 Press the screen selection key.
   2 Press [0 NEXT] and select [6 SYSTEM].
   3 Press F1 [TYPE], and select [Master/Cal] from the menu.
   4 Press the F3 RES_PCA, then press F4 [TRUE].
   5 Turn off the controller power and on again

3 To reset the "Servo 075 Pulse not established" alarm, follow steps 1 to 3.
   1 When the controller power is turned on again, the message "Servo 075 Pulse not established" appears again.
   2 Move the axis for which the message mentioned above has appeared till alarm disappears when press [FAULT RESET] in either direction.

5.1.3 Fixture Position Master

Fixture position mastering is performed using a mastering fixture. This mastering is carried out in the predetermined fixture position.
Fixture position mastering is accurate because a dedicated mastering fixture is used. Fixture position mastering is factory-performed. It is unnecessary to perform it in daily operations.

In the F-200*i*B, fixture position mastering is performed with the operation for 1-axis mastering because it is performed for one axis at a time. "FIXTURE POSITION MASTER" on the Master/Cal menu is not used.

Operation for fixture position mastering

1 Remove the full cover (option) from the robot where applicable (see Section 6.5).
2 As shown in Fig. 5.1.3 (a), remove the nylon band securing the bellows unscrew the bellows pipe from the gearbox and move the bellow pipe upward with using width across flat.

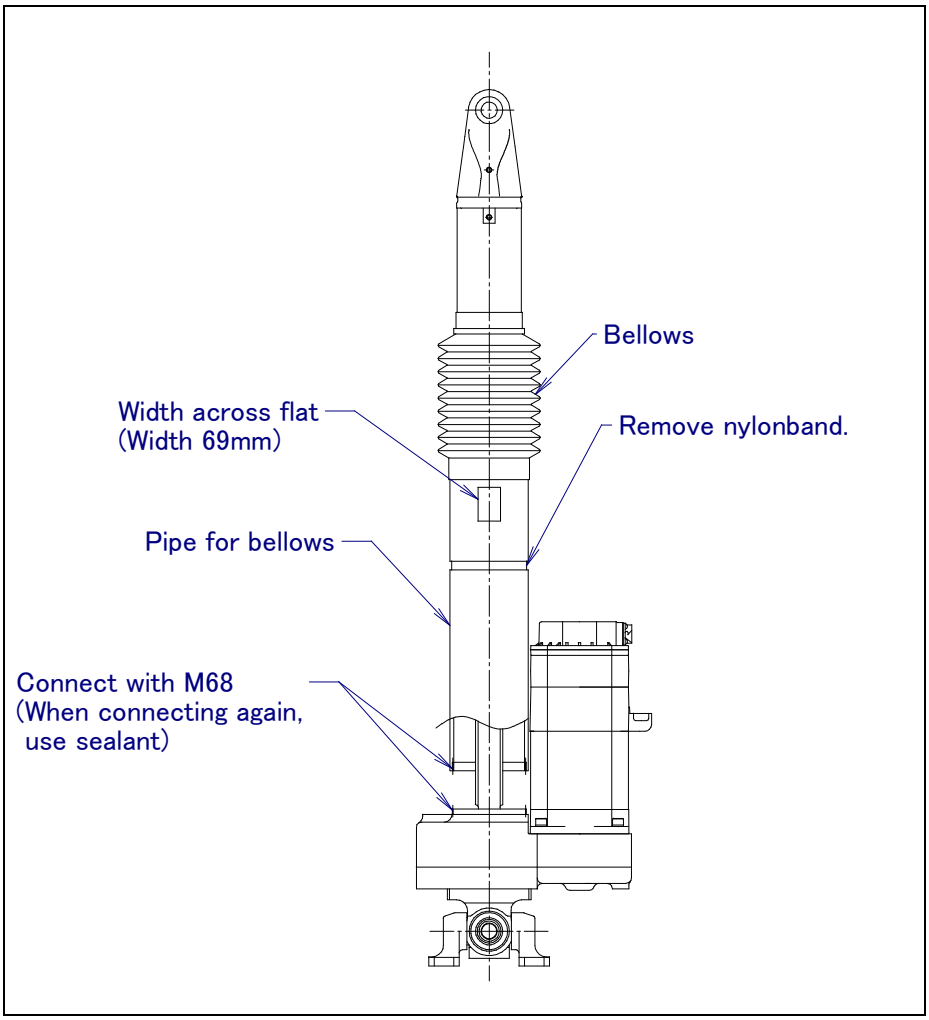

Fig.5.1.3 (a) Preparation for mastering

3 As shown in Fig. 5.1.3 (b), place the mastering fixture on the top of the gearbox.

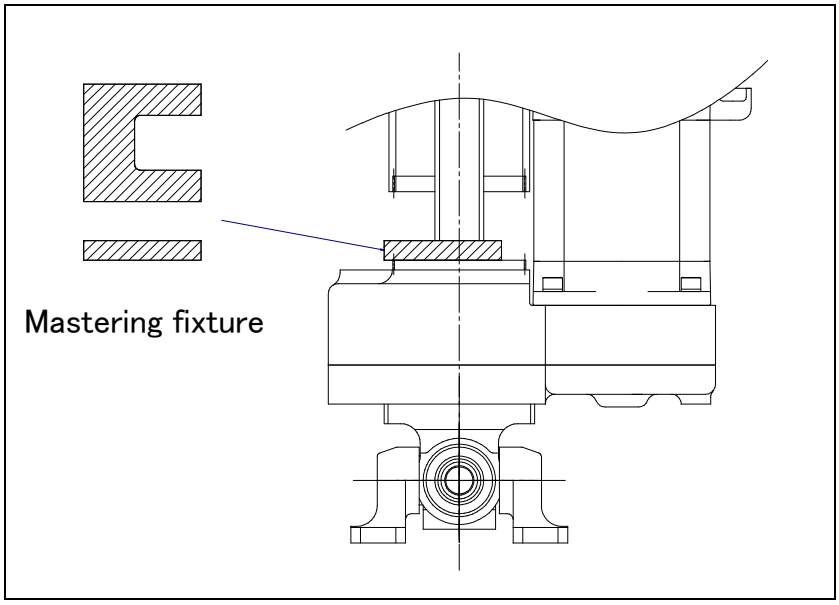

Fig.5.1.3 (b) Mounting of the mastering fixture

4 Press MENUS.
5 Press NEXT and select SYSTEM

6 Press F1, [TYPE].
7 Select Master/Cal.

```
SYSTEM Master/Cal                                JOINT 30%

  1    FIXTURE POSITION MASTER
  2    ZERO POSTIION MASTER
  3    QUICK MASTER
  4    SINGLE AXIS MASTER
  5    SET QUICK MASTER REF
  6    CALLIBRATE

  Press ‘ ENTER ‘ or number key to select.

  [ TYPE ]   LOAD   RES_PCA              DONE
```

8 Select 4, Single Axis Master. You will see a screen similar to the following. For example of J1-axis mastering.

```
SINGLE AXIS MASTER                               JOINT 30%

                                                   1/9
      ACTUAL POS      (MSTR POS)        (SEL)     [ST]
J1      700.000        (0.000)           (0)      [2]
J2      700.000        (0.000)           (0)      [2]
J3      700.000        (0.000)           (0)      [2]
J4      700.000        (0.000)           (0)      [2]
J5      700.000        (0.000)           (0)      [2]
J6      700.000        (0.000)           (0)      [2]
E1        0.000        (0.000)           (0)      [2]
E2        0.000        (0.000)           (0)      [2]
E3        0.000        (0.000)           (0)      [2]

[ TYPE ]                                GROUP   EXEC
```

9 Move the cursor to the SEL column for the unmastered axis and press the numeric key "1." Setting of SEL is available per one axis or per plural axes.

```
                                JOINT 30%
                                            5/9
                  (0.000)    (0)            [0]
                  (0.000)    (0)            [0]
```

```
SINGLE AXIS MASTER                               JOINT 30%
                                                   5/9
J1      700.000     (0.000)          (1)          [0]
J2      700.000     (0.000)          (0)          [0]

                                     GROUP EXEC
```

10 As shown in Fig. 5.1.3 (c), use Each axis to move the tool in the minus direction along the axis for which mastering is to be performed, to bring the bottom face of the ball screw nut in contact with the top face of the mastering fixture. Release brake control.

NOTE

Brake control can be released by setting the system variables as follows:

$PARAM__GROUP. SSV__OFF __ALL : FALSE

$PARAM GROUP. SSV OFF ENB[*] : FALSE (for all axes)

After changing the system variables, turn off the controller power and on again.

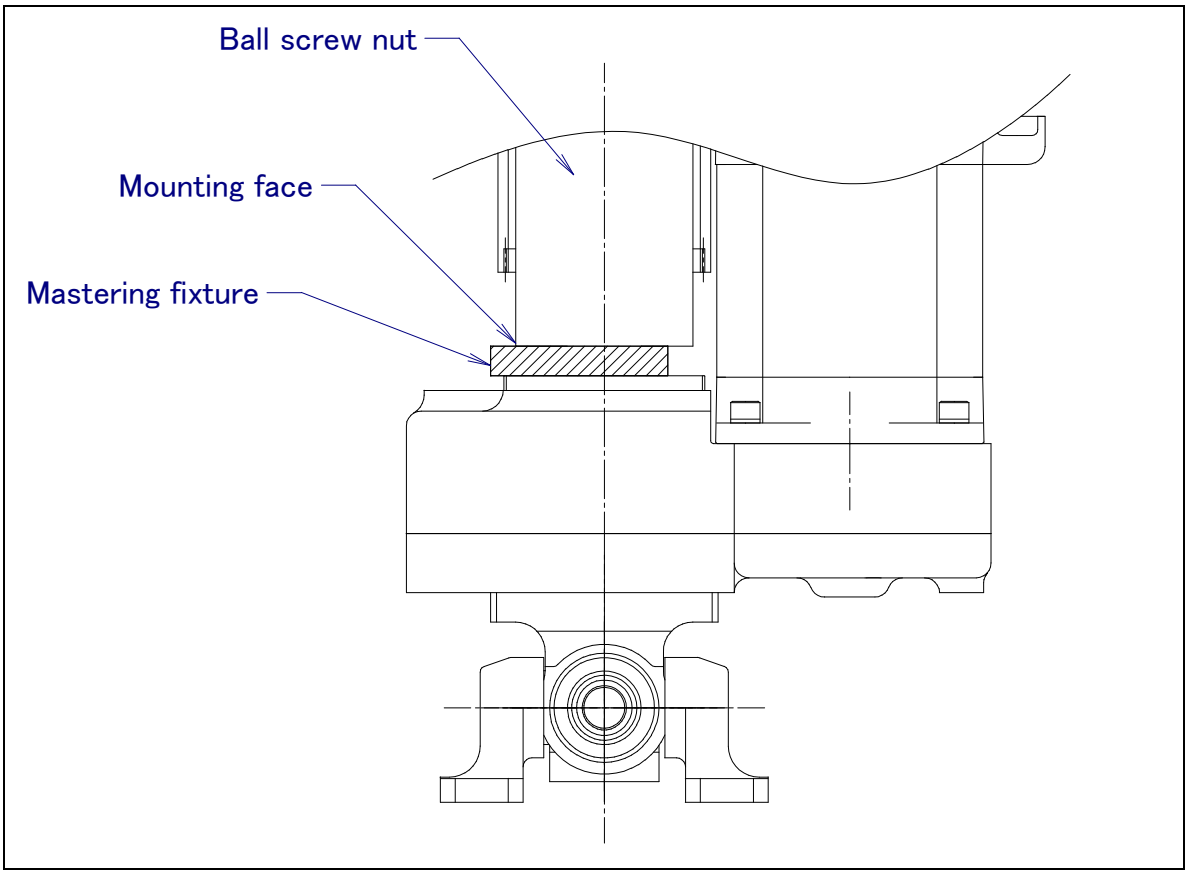

Fig.5.1.3 (c) Bringing the ball screw nut in contact

11 Input ‘668’ to axis data of mastering position.

```
SINGLE AXIS MASTER                                JOINT 30%
                                                    5/9
J1      700.000    (668.000)        (1)           [0]
J2      700.000      (0.000)        (1)           [0]

                                  GROUP EXEC
```

12 Press F5 [EXEC]. Mastering is performed. So, SEL is reset to 0, and ST is re-set to 2 or 1.

```
                                  SINGLE AXIS MASTER                    JOINT 30%
                                                                          1/9
                                    ACTUAL POS    (MSTR POS)    (SEL)    [ST]
GROUP EXEC                       J1   700.000     (668.000)      (0)     [2]
                                 J2   700.000       (0.000)      (0)     [2]
                                 J3   700.000       (0.000)      (0)     [2]
                                 J4   700.000       (0.000)      (0)     [2]
                                 J5   700.000       (0.000)      (0)     [2]
                                 J6   700.000       (0.000)      (0)     [2]
                                 E1     0.000       (0.000)      (0)     [2]
                                 E2     0.000       (0.000)      (0)     [2]
                                 E3     0.000       (0.000)      (0)     [2]

                                 [ TYPE ]                      GROUP   EXEC
```

F5

13 When single axis mastering is completed, press the previous page key to resume the previous screen.

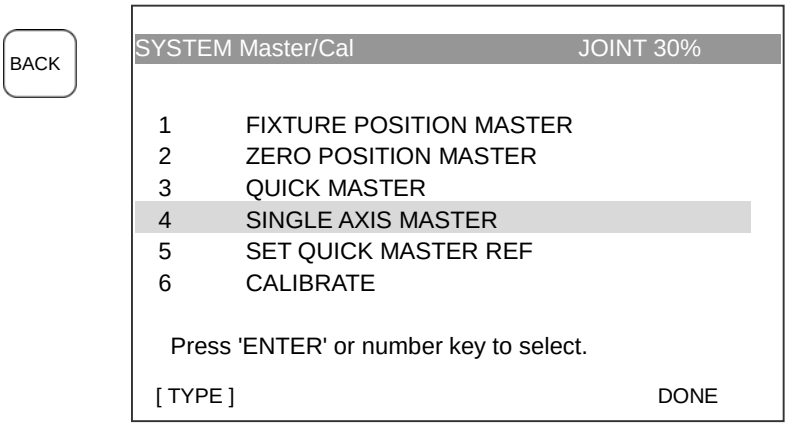

14 Select [6 CALIBRATE], then press F4 [YES]. Positioning is performed. Alternatively, switch the power off and on again. Positioning is performed.
15 Perform the operation described up to now for J1- to J6-axes.
16 After completion of positioning on all axes, press F5 "DONE."

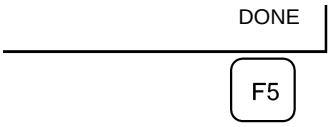

17 Return brake control to original setting, and turn off the controller power and on again.
18 Apply a sealing compound to the M68 threads of the pipe for the bellows, then secure the pipe to the gearbox.
19 Fasten the bellows to the groove of the bellows pipe with nylon bands. Care should be taken not to give a twist in the bellows.
20 Remount the full cover (option) to the robot where applicable (see Section 6.5).

> ⚠ **NOTE**
> No check is made on the axis movable range during mastering. Be very careful when running the robot. Continuing axis movement may result in the mechanical stopper being bumped.

5.1.4 Zero Position Master

Zero position master refers to mastering performed at the position where a marking-off mark is located. The robot is moved to the marking-off positions (668 mm) on all axes to perform mastering.
Marking-off mastering is visual adjustment and, therefore, may not be accurate.
Use this mastering as an emergency measure.

Mastering

1 Press MENUS.
2 Press NEXT and select SYSTEM.
3 Press F1, [TYPE].
4 Select Master/Cal.

```
SYSTEM Master/Cal                          JOINT 30%

  1    FIXTURE POSITION MASTER
  2    ZERO POSTIION MASTER
  3    QUICK MASTER
  4    SINGLE AXIS MASTER
  5    SET QUICK MASTER REF
  6    CALLIBRATE

  Press ‘ ENTER ‘ or number key to select.

  [ TYPE ]     LOAD   RES_PCA                 DONE
```

5 Release brake control, and jog the robot into a posture for mastering.

> ⚠ **NOTE**
> Brake control can be released by setting the system variables as follows:
> $PARAM__GROUP. SSV__OFF __ALL : FALSE
> $PARAM GROUP. SSV OFF ENB[*] : FALSE (for all axes)
> After changing the system variables, switch the controller power off and on again.

6 Select Fixture Position Master.
7 Press F4, YES. Mastering will be performed automatically.
Alternatively, switch the power off and on again. Switching the power on always causes positioning to be performed.
8 After positioning is completed, press F5 [DONE].
9 Return brake control to original setting, and turn off the controller power and on again.

Table 5.1.4 Marking-Off mark position

All axes	668 mm

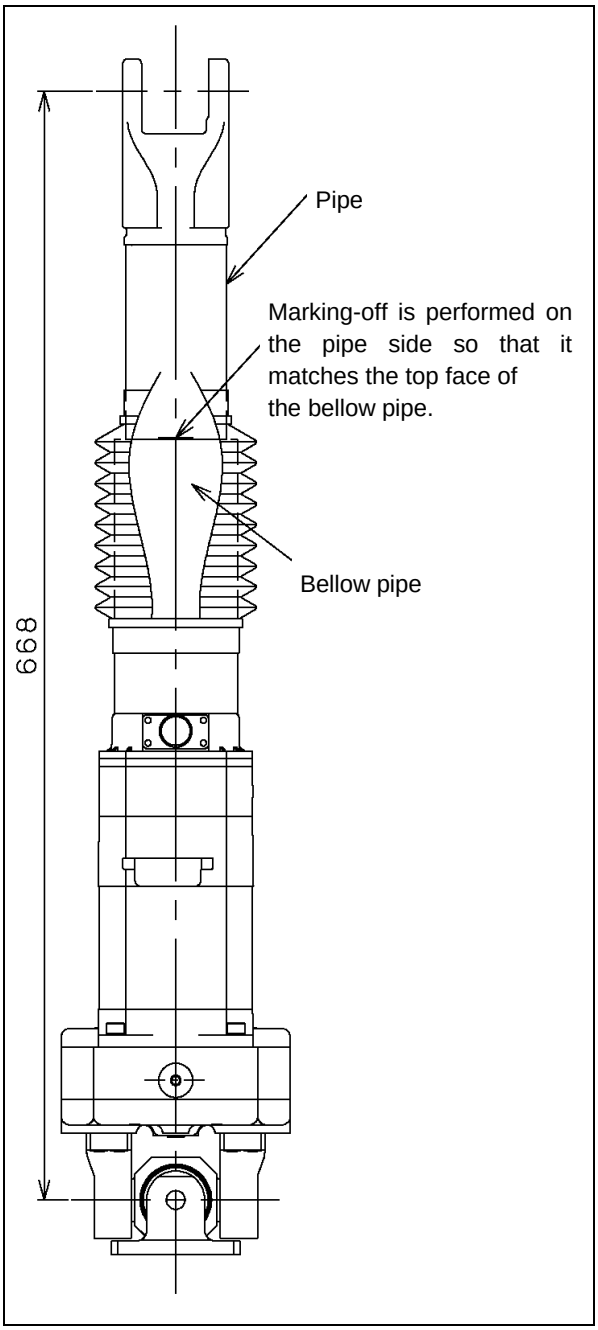

Fig.5.1.4 (a) Zero position mark position (J1-, J3, J4, and J6-axes)

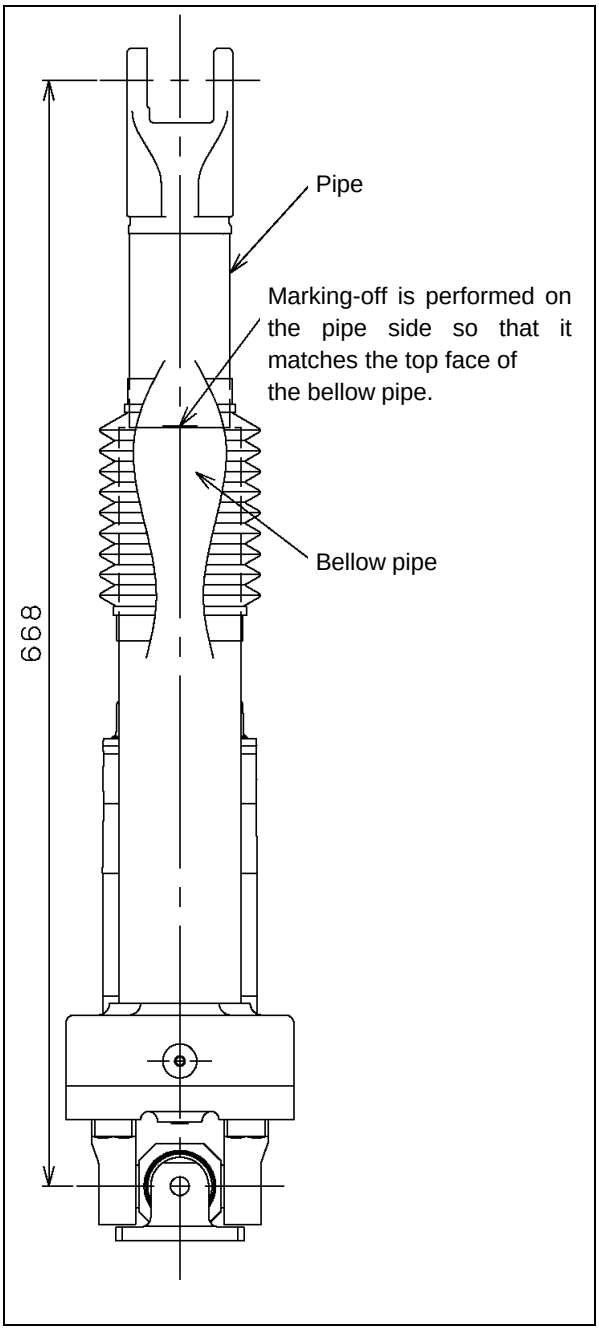

Fig.5.1.4 (b) Zero position mark position (J2- and J5-axes)

5.1.5 Quick Mastering

Quick mastering is performed at a user-specified position. The corresponding count value is obtained from the rotation speed of the Pulsecoder connected to the relevant motor and the rotation angle within one rotation. Quick mastering uses the fact that the absolute value of a rotation angle within one rotation will not be lost.

Quick mastering is factory-performed at the position indicated in Table 5.1.4. Do not change the setting unless there is a problem.

If it is impossible to set the robot at the position mentioned above, it is necessary to re-set the quick mastering reference position using the following method. (It would be convenient to set up a marker that can work in place of the witness mark.)

> ⚠**NOTE**
> 1 Quick mastering can be used, if the pulse count value is lost, for example, because a low voltage has been detected on the backup battery for the pulse counter.
> 2 Quick mastering cannot be used, after the Pulsecoder is replaced or after the mastering data is lost from the robot controller.

Procedure Recording the Quick Master Reference Position

Step

1 Select SYSTEM.
2 Select Master/Cal.

```
SYSTEM Master/Cal                          JOINT 30%

  1    FIXTURE POSITION MASTER
  2    ZERO POSTIION MASTER
  3    QUICK MASTER
  4    SINGLE AXIS MASTER
  5    SET QUICK MASTER REF
  6    CALLIBRATE

  Press ‘ ENTER ‘ or number key to select.

  [ TYPE ]    LOAD   RES_PCA                DONE
```

3 Release brake control, and jog the robot to the quick mastering reference position.
4 Move the cursor to SET QUICK MASTER REF and press ENTER. Press F4, YES.

> ⚠ **NOTE**
> If the robot has lost mastery due to mechanical disassembly or repair, you cannot perform this procedure. In this case, master to a fixture or master to zero degrees to restore robot mastery.

Procedure Quick Mastering

Step

1 Display the Master/Cal screen.

```
SYSTEM Master/Cal                          JOINT 30%

  1    FIXTURE POSITION MASTER
  2    ZERO POSTIION MASTER
  3    QUICK MASTER
  4    SINGLE AXIS MASTER
  5    SET QUICK MASTER REF
  6    CALLIBRATE

  Press ‘ ENTER ‘ or number key to select.

  [ TYPE ]    LOAD   RES_PCA                DONE
```

2 Release brake control, and jog the robot to the quick mastering reference position.

3 Move the cursor to QUICK MASTER and press ENTER. Press F4, YES. Quick mastering data is memorized.
4 Move the cursor to CALIBRATE and press ENTER. Calibration is executed. Calibration is executed by power on again.
5 After completing the calibration, press F5, DONE.

DONE

F5

6 Return brake control to original setting, and turn off the controller power and on again.

5.1.6 Single Axis Mastering

Single axis mastering is performed for one axis at a time. The mastering position for each axis can be specified by the user.
Single axis mastering can be used, if mastering data for a specific axis is lost, for example, because a low voltage has been detected on the pulse counter backup battery or because the Pulsecoder has been replaced. In the F-200*i*B, this function is also used for mastering by the use of a fixture.

```
SINGLE AXIS MASTER                          JOINT 30%
                                                 1/9
     ACTUAL POS      (MSTR POS)      (SEL)     [ST]
J1      700.000        (0.000)        (0)       [2]
J2      700.000        (0.000)        (0)       [2]
J3      700.000        (0.000)        (0)       [2]
J4      700.000        (0.000)        (0)       [2]
J5      700.000        (0.000)        (0)       [2]
J6      700.000        (0.000)        (0)       [2]
E1        0.000        (0.000)        (0)       [2]
E2        0.000        (0.000)        (0)       [2]
E3        0.000        (0.000)        (0)       [2]

                                    GROUP    EXEC
```

Table 5.1.6 Items set in single-axis mastering

Item	Description
Current position (ACTUAL POS)	The current position of the robot is displayed for each axis in degree units.
Mastering position (MSTR POS)	A mastering position is specified for an axis to be subjected to single axis mastering. It would be convenient to set to it to the 0° position.
SEL	This item is set to 1 for an axis to be subjected to single axis mastering. Usually, it is 0.
ST	This item indicates whether single axis mastering has been completed for the corresponding axis. It cannot be changed directly by the user. The value of the item is reflected in $EACHMST_DON (1 to 9). 0: Mastering data has been lost. Single axis mastering is necessary. 1: Mastering data has been lost. (Mastering has been performed only for the other interactive axes.) Single axis mastering is necessary. 2: Mastering has been completed.

Procedure Mastering a Single Axis

Step

1 Select SYSTEM.
2 Select Master/Cal.

```
SYSTEM Master/Cal                                JOINT 30%

  1     FIXTURE POSITION MASTER
  2     ZERO POSTIION MASTER
  3     QUICK MASTER
  4     SINGLE AXIS MASTER
  5     SET QUICK MASTER REF
  6     CALLIBRATE

  Press ‘ ENTER ‘ or number key to select.

  [ TYPE ]     LOAD   RES_PCA                  DONE
```

3 Select 4, Single Axis Master. You will see a screen similar to the following.

```
SINGLE AXIS MASTER                               JOINT 30%
                                                      1/9
     ACTUAL POS        (MSTR POS)        (SEL)      [ST]
J1      700.000          (0.000)           (0)       [2]
J2      700.000          (0.000)           (0)       [2]
J3      700.000          (0.000)           (0)       [2]
J4      700.000          (0.000)           (0)       [2]
J5      700.000          (0.000)           (0)       [2]
J6      700.000          (0.000)           (0)       [2]
E1        0.000          (0.000)           (0)       [2]
E2        0.000          (0.000)           (0)       [2]
E3        0.000          (0.000)           (0)       [2]

                                          GROUP    EXEC
```

4 Move the cursor to the SEL column for the unmastered axis and press the numeric key "1." Setting of SEL is available per one axis or per plural axes.

```
                                JOINT 30%
                                                5/9
                (0.000)     (0)                 [0]
                (0.000)     (0)                 [0]
```

```
SINGLE AXIS MASTER                               JOINT 30%
                                                      5/9
J1      700.000     (0.000)              (1)        [0]
J2      700.000    (90.000)              (0)        [0]

                                          GROUP EXEC
```

5 Turn off brake control as required, then jog the robot to the mastering position.
6 Enter axis data for the mastering position.

```
SINGLE AXIS MASTER                               JOINT 30%
                                                      5/9
J1      700.000     (668.000)            (1)        [0]
J2      700.000       (0.000)            (1)        [0]

                                          GROUP EXEC
```

7 Press F5 [EXEC]. Mastering is performed. So, SEL is reset to 0, and ST is re-set to 2 or 1.

GROUP EXEC

F5

```
SINGLE AXIS MASTER                                  JOINT 30%

                                                        1/9
     ACTUAL POS      (MSTR POS)      (SEL)          [ST]
J1     700.000        (668.000)       (0)           [2]
J2     700.000         (0.000)        (0)           [2]
J3     700.000         (0.000)        (0)           [2]
J4     700.000         (0.000)        (0)           [2]
J5     700.000         (0.000)        (0)           [2]
J6     700.000         (0.000)        (0)           [2]
E1       0.000         (0.000)        (0)           [2]
E2       0.000         (0.000)        (0)           [2]
E3       0.000         (0.000)        (0)           [2]

[ TYPE ]                                   GROUP   EXEC
```

8 When single-axis mastering is completed, press the previous page key to resume the previous screen.

BACK

```
SYSTEM Master/Cal                                   JOINT 30%

1        FIXTURE POSITION MASTER
2        ZERO POSITION MASTER
3        QUICK MASTER
4        SINGLE AXIS MASTER
5        SET QUICK MASTER REF
6        CALIBRATE

 Press 'ENTER' or number key to select.

[ TYPE ]                                                DONE
```

9 Select [6 CALIBRATE], then press F4 [YES]. Positioning is performed.
Alternatively, switch the power off and on again. Positioning is performed.

10 After positioning is completed, press F5 [DONE].

DONE

F5

11 Return brake control to original setting, and turn off the controller power and on again.

5.1.7 Mastering Data Entry

This function enables mastering data values to be assigned directly to a system variable. It can be used, if mastering data has been lost, but the pulse count is preserved.

Mastering Data entry method

Step

1 Select [6 SYSTEM] and press ENTER.

2 Press F1 [TYPE] to select.

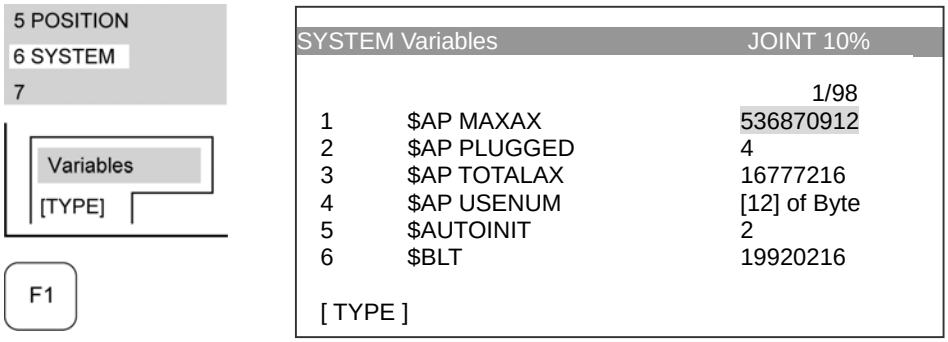

3 Change the mastering data.
The mastering data is saved to the $DMR_GRP.$MASTER_COUN system variable.

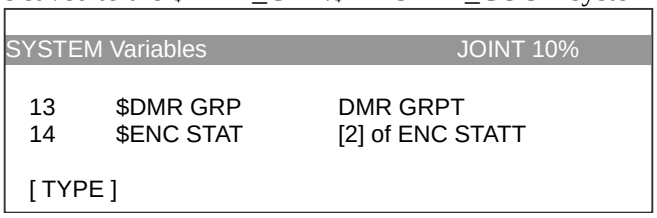

4 Select $DMR_GRP.

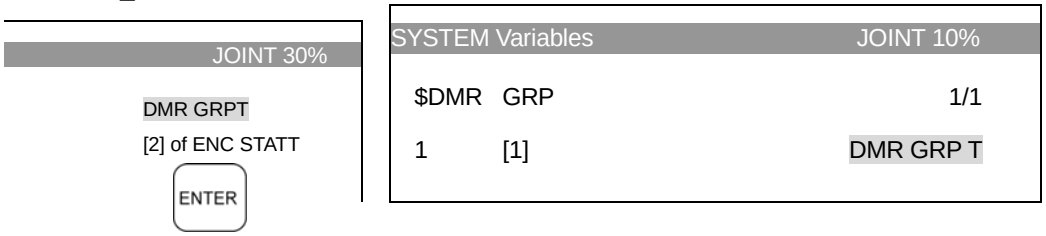

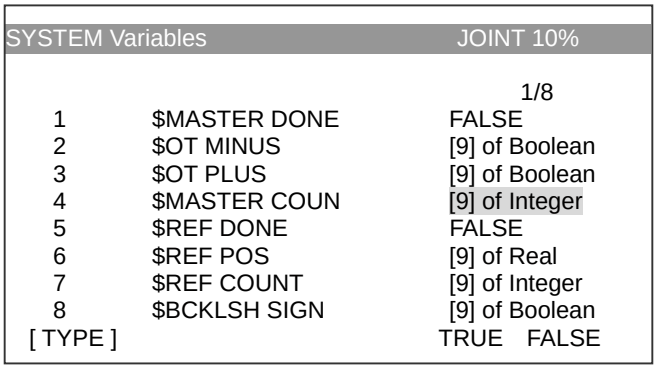

5 Select $MASTER_COUN, and enter the mastering data you have recorded.

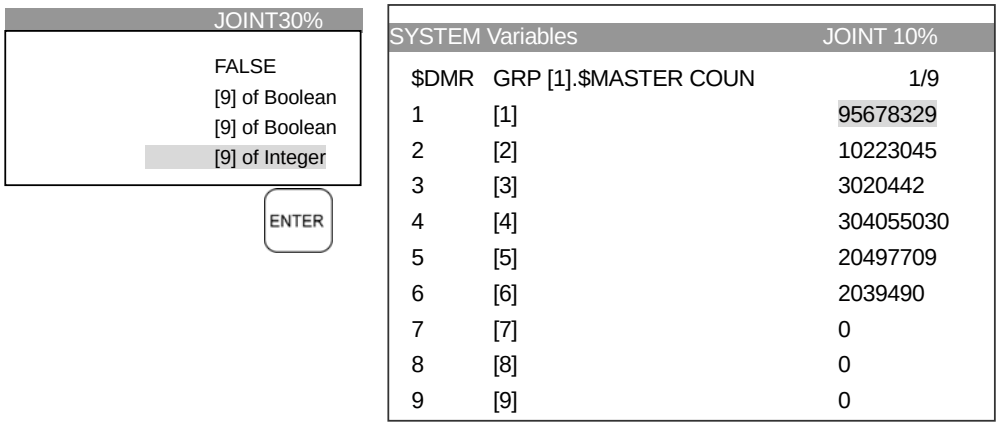

6 Press the previous page key.
7 Set $MASTER_DONE to TRUE

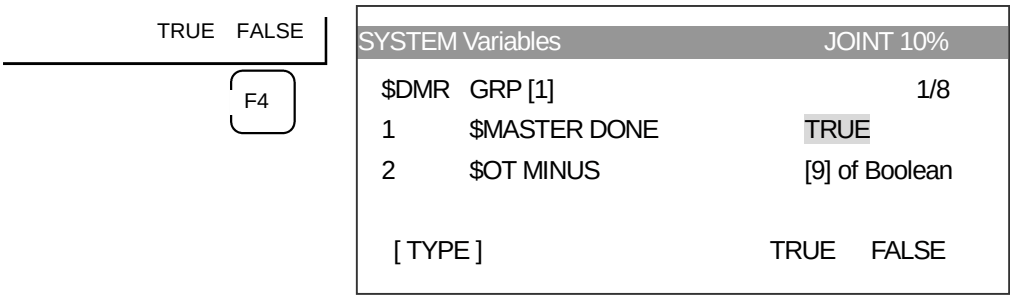

8 Display the positioning screen, and select [6 CALIBRATE], then press F4 [YES].
9 After completing positioning, press F5 [DONE].

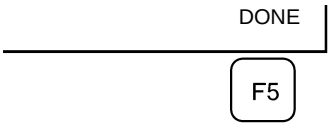

5.2 CHECKING THE MASTERING

1 Checking whether mastering has been made correctly

Usually, positioning is performed automatically at power-on. To check whether mastering has been made correctly, note whether the displayed current position agrees with the actual robot position. Use the procedure described below:

(1) Reproduce a particular point in a program. Check whether the point agrees with the specified position.
(2) Set all axes of the robot to their 668mm positions. Check that the zero-degree position marks indicated in Subsection 5.1.4 are aligned. There is no need to use any visual aid.
(3) Using fixtures, set the robot to the mastering position in the same way as when performing mastering. Check that the displayed current position agrees with the actual mastering position.

If the displayed and actual positions do not match, the counter value for a Pulsecoder may have been invalidated as a result of an alarm described below 2. Alternatively, the mastering data in system variable $DMR_GRP.$MASTER_COUN may have been overwritten as a result of an operation error or some other reason.
Compare the data with the values indicated on the supplied data sheet. This system variable is overwritten whenever mastering is performed. Whenever mastering is performed, record the value of the system variable on the data sheet.

2 Alarms that may be output during mastering and remedy for it
(1) BZAL alarm
This alarm is output if the voltage of the Pulsecoder's backup battery falls to 0 V while the power to the controller is disconnected. Also, if Pulsecoder connector is removed for replacing cables etc. this alarm is output because voltage becomes to 0. To clear the alarm, fit a new battery, execute the pulse reset (See Subsection 5.1.2.), then turn the power off then on again and confirm alarm is not output.
Battery might be weak if you can’t reset alarm, then replace battery to new one , perform pulse reset , turn off and on the controller power. Note that, if this alarm occurs, all data originally held by the Pulsecoder will have been lost. Mastering must be performed again.
(2) BLAL alarm

This alarm is output if the voltage of the Pulsecoder's backup battery has fallen to a level where backup is no longer possible. If this alarm is output, fit a new battery immediately while keeping the power turned on. Check whether the current position data is valid, using the procedure described in 1.

(3) CKAL, RCAL, PHAL, CSAL, DTERR, CRCERR, STBERR, and SPHAL, alarms
Contact the FANUC because the Pulsecoder may be defective.

6 REPLACING PARTS

This section describes the replacement procedures for the major components of the mechanical section. When replacing mechanical components, be sure to follow the respective procedures. See Section 8 for how to replace the cables.

6.1 NOTE FOR PART REPLACEMENT

Once motors are replaced, mastering becomes necessary. Perform mastering according to Section 5.1 after any of these components is replaced.
Be very careful when carrying and assembling the heavy components listed below.

Table 6.1 Weight of the main parts

Component	Weight (approximate)
Servo motor (same motors used in M1 to M6)	6kg
LEG unit. (See Fig. 6.3.)	19kg
Wrist unit. (See Fig. 6.4.)	38kg
Controller (A cabinet)	120kg
Controller (B cabinet)	180kg

In case of reusing seal bolts for F-200*i*B, observe following notes strictly.
(If possible, change them to new seal bolts)

1) Apply LOCTITE 242 to female threads when the reusing seal bolts.
2) Notice the following 1 notes.
   Remove excessive bits of sealant on the seal bolt.

NOTE
When applying LOCTITE to the important bolt tightening points, make sure that it is applied to the entire longitudinal portion in the engaging section of the female threads. If it is applied to the male threads, the bolts may be loosened because sufficient adhesion cannot be obtained. Remove the dust within the bolts and taps and wipe oil off the engaging section. Make sure that there is no solvent in the taps. Be sure to wipe the excess LOCTITE after tightening bolt.

NOTE
1 Description of [LT242] means LOCTITE 242.
2 Description of [LT262] means LOCTITE 262.
3 Description of [LT518] means LOCTITE 518.
4 Description of [LT7649] means LOCTITE 7649.

6.2 REPLACING MOTORS (FOR ALL AXES)

Remove

1 Remove the full cover (option) from the robot where applicable (see Section 6.5).
2 Set the robot to a posture with about the same lengths on all axes, and lift the top plate with a sling.
3 Set dial gauges at replacing axis, and prepare for single axis mastering after replacement.
4 Turn off the controller power.
5 Remove two connectors of the motor (1).
6 Remove four motor mounting bolts (2) and then remove the washer (3).

7 Pull out the motor (1) from the gearbox vertically, while being careful not to scratch the surface of the gear teeth.
Then pull out the flange(9) simultaneously by hanging up flange on gear.
8 Remove the nut (7) and washer (6) from the shaft of the motor (1).
9 Pull off the gear (5) from the shaft of the motor (1).

Assembling

1 Grind the flange surface of the motor (1) using an oil stone.
2 Apply new seal (4) to motor (1).
An auxiliary seal is included in A068-0215-B605#S000.
3 Mount the flange(9) and O-ring(8) on the motor.
4 Mount the gear (5) on the shaft of the motor (1).
5 Apply sealant (LOCTITE gasket eliminater 518) to the contact surface of washer(6) and gear(5), nut(7) and washer(6).
6 Attach the nut (7) and washer (6) to the motor (1).
7 Apply sealant (LOCTITE gasket eliminater 518) to the place indicated in figure of motor flange and flange(9), and Apply primer(LOCTITE 7649) to the place indicated in figure of gearbox 2 (11).
8 Mount the motor (1) on the J1 base vertically, while being careful not to scratch the surface of the gear teeth. When mounting, make sure that the O-ring (8) is in the prescribed place.
9 Attach the four motor mounting bolts (2) and washers (3).
10 Attach the two connectors to the motor (1).
11 Perform single axis mastering referring to Subsection 5.1.6 of MAINTENANCE.
12 Remount the full cover (option) to the robot where applicable (see Section 6.5).

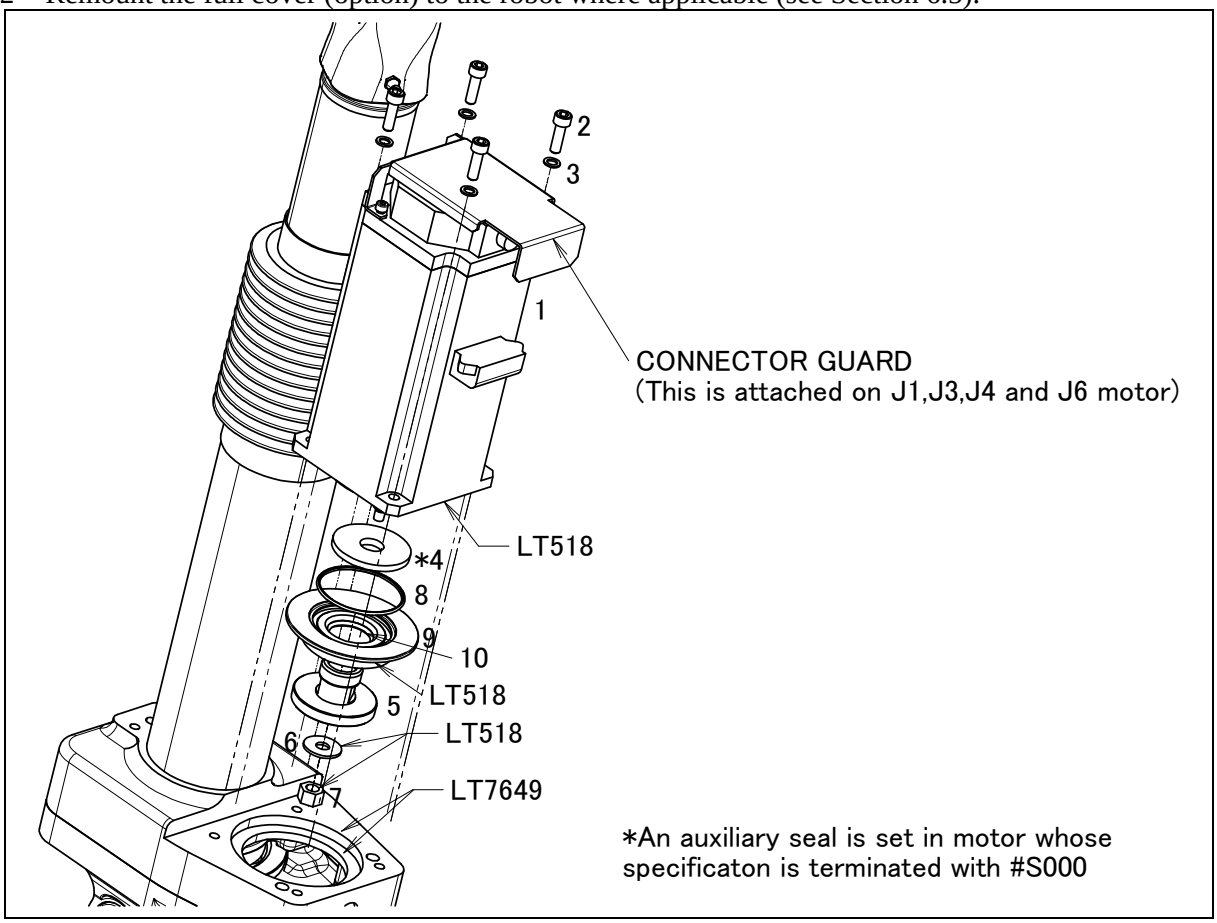

Fig.6.2 Replacing motor

Table 6.2 Replacing motor

	Name	Specifications	Q'ty	LOCTITE	Torque (N-m)
1	MOTOR	A06B-0215-B605#S000	1		
2	BOLT	A6-BA-6X20	4		
3	WASHER	A97L-0001-0823#M6H	4		
4	SEAL	A98L-0004-0771#A25	1		
5	GEAR 1	A290-7517-Y311	1		
6	WASHER	A290-7517-X321	1	LT518	
7	NUT	Contained in item 1.	1	LT242, LT518	7.4
8	O RING	A98L-0001-0347#S50	1		
9	FLANGE	A290-7517-X320	1	LT518	
10	OIL SEAL	A98L-0040-0049#02504207	1		
11	GEARBOX 2	A290-7517-X302	1	LT7649	

6.3 REPLACING LEG UNITS (FOR ALL AXES)

Disassembly

1 Remove the full cover (option) from the robot where applicable (see Section 6.5).
2 Set the robot to a posture with an equal length of 820 mm or greater on all axes, and lift the total top assembly (1) with a sling.
3 Set dial gauges at replacing axis, and prepare for single axis mastering after replacement.
4 Turn off the controller power.
5 Remove the two connectors of motor (2).
6 Cut off nylon band (3) on the pipe, and remove bellows (4).
7 Remove set screw (6) of pipe (5).
8 Remove pipe (5) from head (7). To do this, rotate pipe (5) while securing head (7) so that it is not rotated.
9 Remove M10 bolt (8), M10 washer (9), M8 bolt (10), and M8 washer (11). Remove the leg unit together with joint support 1 (12). Joint support 1 (12) faces the gearbox, and is opposite from the motor.

Assembly

1 Polish the joint support mounting surface of baseplate (13) with oil stone.
2 Insert joint pin (15) of a new LEG unit into joint support 1 (14). Tighten M10 bolt (8) and M10 washer (9) with the specified torque.
3 Insert joint support 1 (12) and (14) into joint pin (15). Tack it with M10 bolt (16) and M10 washer (17), then secure them to baseplate (13) with M8 bolts (10) and M8 washers (11). Finally, tighten M10 bolt (16) with the specified torque.
4 Mount pipe (5) to head (7). To do this, rotate pipe (5) while securing head (7) so that it is not rotated.
5 Mount set screw (6) of pipe (5).
6 Mount the two connectors to motor (2).
7 Perform single axis mastering referring to Subsection 5.1.6 of MAINTENANCE.
8 Secure bellows (4) to the pipe with nylon band (3).
9 Remount the full cover (option) to the robot where applicable (see Section 6.5).

NOTE

When the pipe (5) is to be removed from and mounted to head (7), the width across flat of the parallel portion of head (7) and the side of pipe (5) is used. Take great care so that impact and excessive force are not applied to the pipe (5) and head (7).

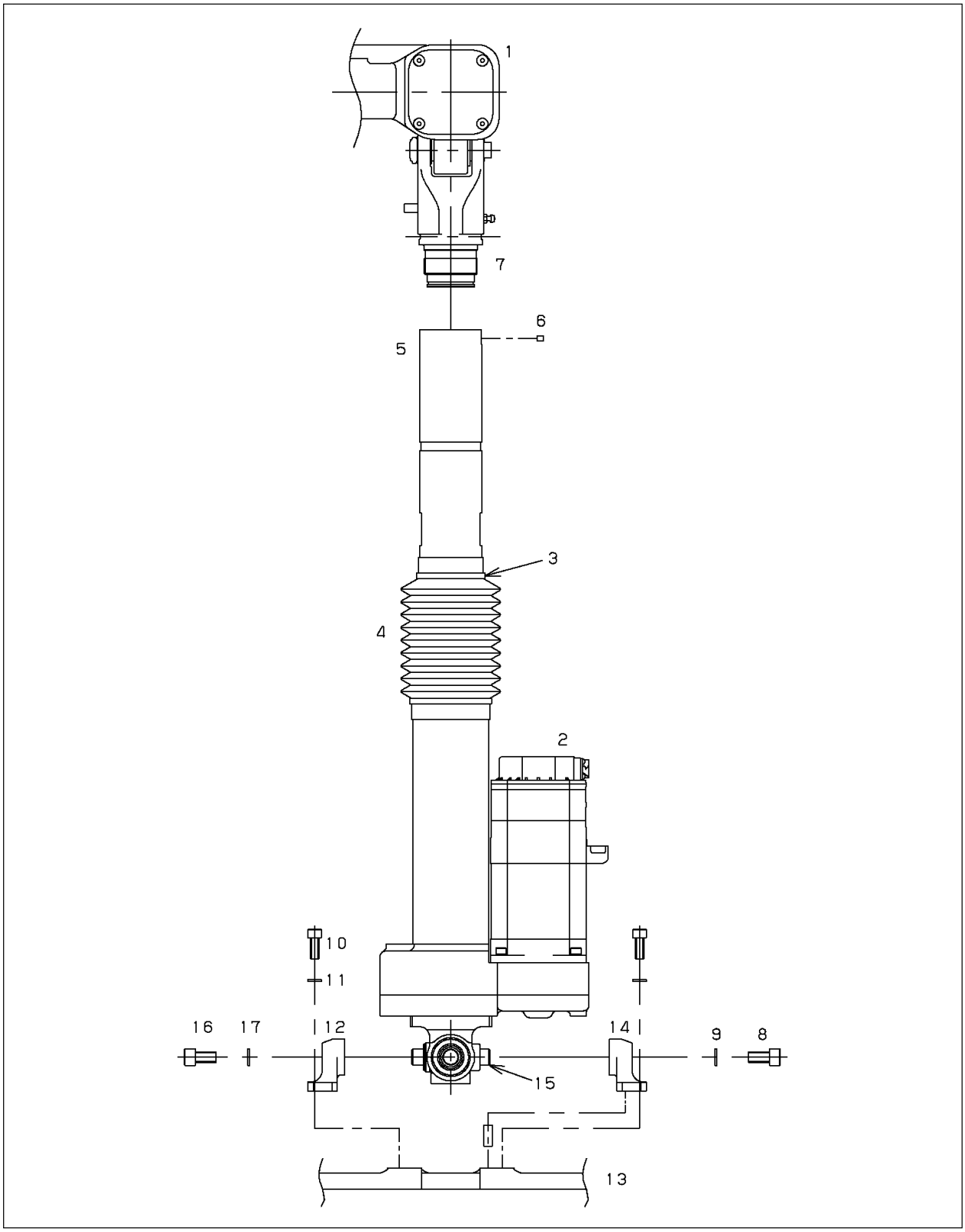

Fig.6.3 Replacing LEG unit

Table 6.3 Replacing LEG unit

	Name	Specifications	Q'ty	LOCTITE	Torque (N-m)
1	TOTAL TOP ASSY	A05B-1517-K501	1		
2	MOTOR	A06B-0215-B605#S000	1		
3	NYLON BAND	ー	1		
4	BELLOWS	A290-7517-X316	1		
5	PIPE	A290-7517-X401	1		
6	SET SCREW	A6-SAKT-5X6	1		
7	HEAD	A290-7517-X402	1		
8	BOLT	A6-BA-10X20	1	LT262	76
9	WASHER	A97L-0001-0823#M10H	1		
10	BOLT	A6-BA-8X20	4	LT262	37
11	WASHER	A97L-0001-0823#M8H	4		
12	JOINT SUPPORT 1	A290-7517-X303	1		
13	BASE PLATE	A290-7517-X201	1		
14	JOINT SUPPORT 1	A290-7517-X303	1		
15	JOINT PIN	A290-7517-X306	1		
16	BOLT	A6-BA-10X20	1	LT262	76
17	WASHER	A97L-0001-0823#M10H	1		

6.4 REPLACING THE WRIST UNIT

Disassembly

1 Remove the full cover (option) from the robot where applicable (see Section 6.5).
2 Set the robot to a posture with an equal length of 820 mm or greater on all axes, and lift the total top assembly (1) with a sling.
3 Set dial gauges at J1 to J6 axes, and prepare for single axis mastering after replacement.
4 Turn off the controller power.
5 Perform the following for each of the J1- to J6-axes.
   1) Cut off nylon band (3) on the pipe, and remove bellows (4).
   2) Remove set screw (6) of pipe (5).
   3) Remove pipe (5) from head (7). To do this, rotate pipe (5) while securing head (7) so that it is not rotated.

Assembly

1 Perform the following for each of the J1- to J6-axes.
   1) Mount pipe (5) to head (7). To do this, rotate pipe (5) while securing head (7) so that it is not rotated.
   2) Mount set screw (6) of pipe (5).
2 Perform single axis mastering referring to Subsection 5.1.6 of MAINTENANCE.
3 Secure bellows (4) on each axis to pipe (5) with nylon band (3).
4 Remount the full cover (option) to the robot where applicable (see Section 6.5).

NOTE

1 When pipe (5) is to be removed from and mounted to head (7), the width across flat of the parallel portion of head (7) and the side of pipe (5) is used. Take great care so that impact and excessive force are not applied to pipe (5) and head (7).

2 After pipe (5) is removed from head (7), LEG unit (8) is slanted to keep the posture. At this time, take care so that no impact is applied to LEG unit (8).

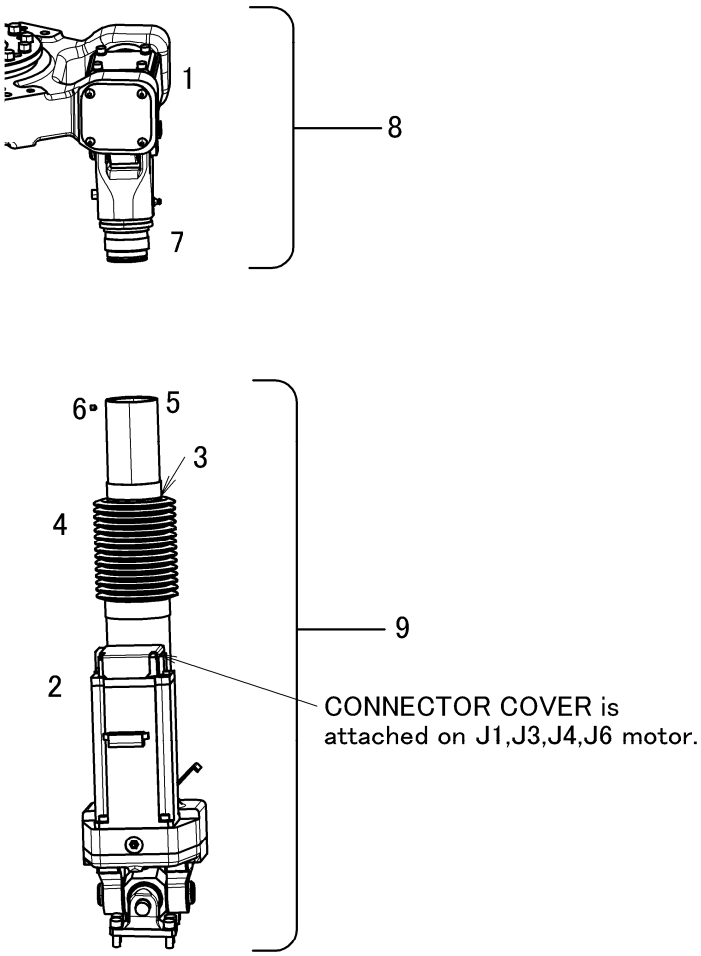

Fig. 6.4 Replacing wrist unit

Table 6.4 Replacing wrist unit

	Name	Specifications	Q'ty	LOCTITE	Torque (N-m)
1	TOTAL TOP ASSY	A05B-1517-K501	1		
2	MOTOR	A06B-0215-B605#S000	6		
3	NYLON BAND	—	6		
4	BELLOWS	A290-7517-X316	6		
5	PIPE	A290-7517-X401	6		
6	SET SCREW	A6-SAKT-5X6	6		
7	HEAD	A290-7517-X402	6		
8	WRIST	—	6		
9	TOTAL LEG ASSY	A05B-1517-K311	6		

6.5 REPLACING THE FULL COVER (OPTION)

Disassembly

1 Set the robot in a posture in such a way that its all axes are almost the same in length, and turn off the power.
2 Remove the M8 screws (3), and then the plates (2).
3 Open Velcro fasteners C, B, and A in that order, and open the top plate Velcro fastener.

Assembly

1 Set the robot in a posture in such a way that its all axes are almost the same in length, and turn off the power.
2 Put the jacket (1) on the robot so that Velcro fasteners A and B face to the connector panel.
3 Align their counterparts an the jacket (1) with the screw holes and top plate Velcro fastener, and fasten the jacket with the M8 screws (3) and plates (2).
4 Close Velcro fasteners A and B in that order on the open/close part of the jacket (1).
5 Close Velcro fastener C on the support plate at the bottom of the robot.

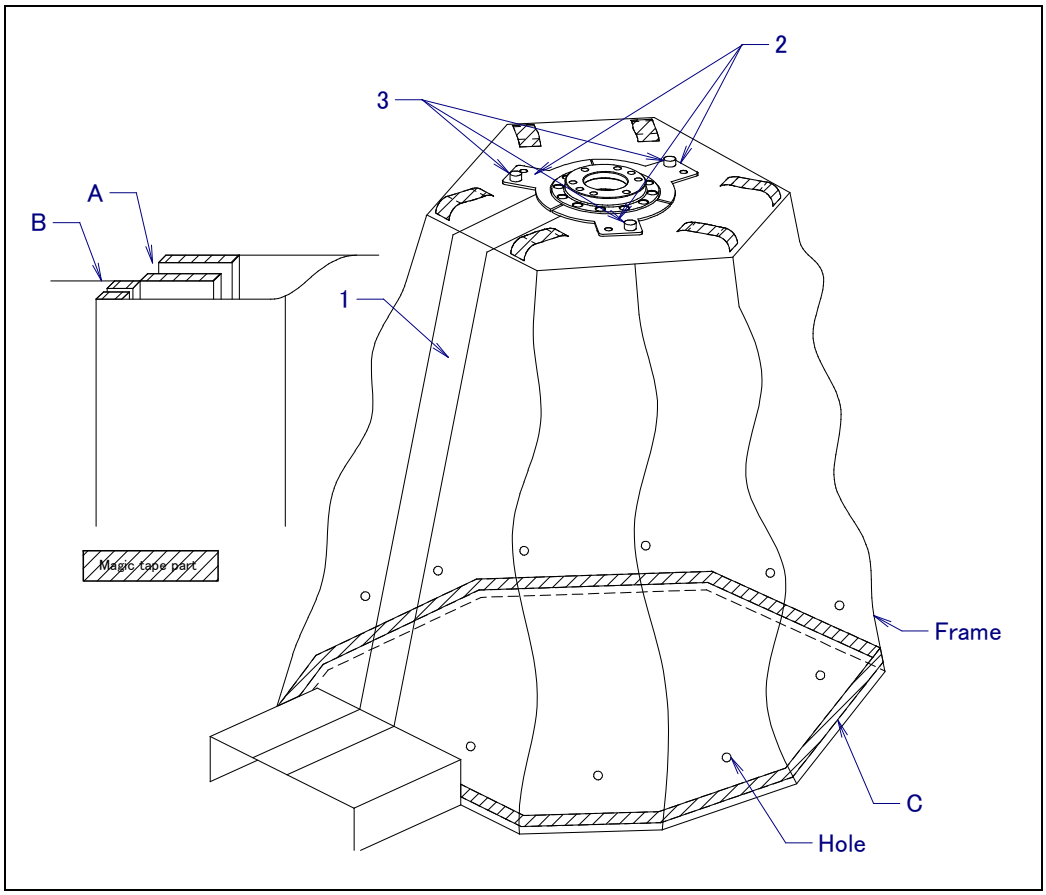

Fig.6.5 Replacing full cover (option)

Table 6.5 Replacing full cover (option)

	Name	Specifications	Q'ty	LOCTITE	Torque (N-m)
1	JACKET	A290-7517-Y222	1		
2	PLATE	A290-7517-Y219	3		
3	BOLT	A6-BA-8X10	3		See the torque list in Appendix.

> ⚠ **CAUTION**
> Full cover option has a rubber sponge for filling the center hole of faceplate. To avoid entrance of any matter from the hole, don't remove the rubber sponge.
> Hole for cable tie to secure cover to mounting ring when invert.

6.6 REPLACING THE CABLE COVER (OPTION)

Disassembly

1 Turn off the controller power.
2 Remove the nylon bands.
3 Open the Velcro fasteners.

Assembly

1 Turn off the power.
2 Put a cover on each cable with the silver side facing outward, and close the Velcro fasteners.
3 Fasten the both ends of each cover with nylon bands.

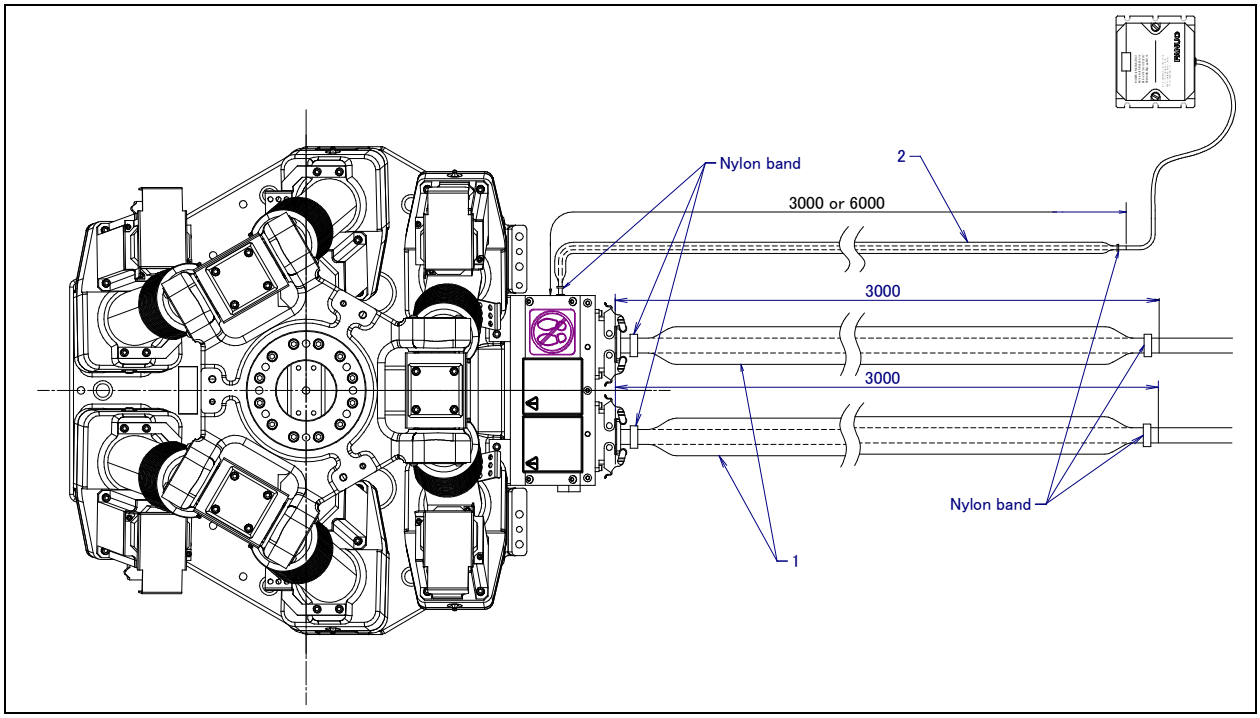

Fig.6.6 Replacing cable cover (option)

Table 6.6 Replacing cable cover (option)

	Name	Specifications	Q'ty	Torque (N-m)
1	CABLE COVER 3m	A290-7517-X223	2	For a power cable (K201) and a pulsecoder and end effector cable (K202)
	CABLE COVER 6m	A290-7517-X225	2	For a power cable (K201) and a pulsecoder and end effector cable (K202)
2	CABLE COVER 3m	A290-7517-X224	1	For a battery cable (K103)
	CABLE COVER 6m	A290-7517-X226	1	For a battery cable (K103)

7 PIPING AND WIRING

Fig.7.1 (a) to (b) show the wiring diagram of the mechanical unit.

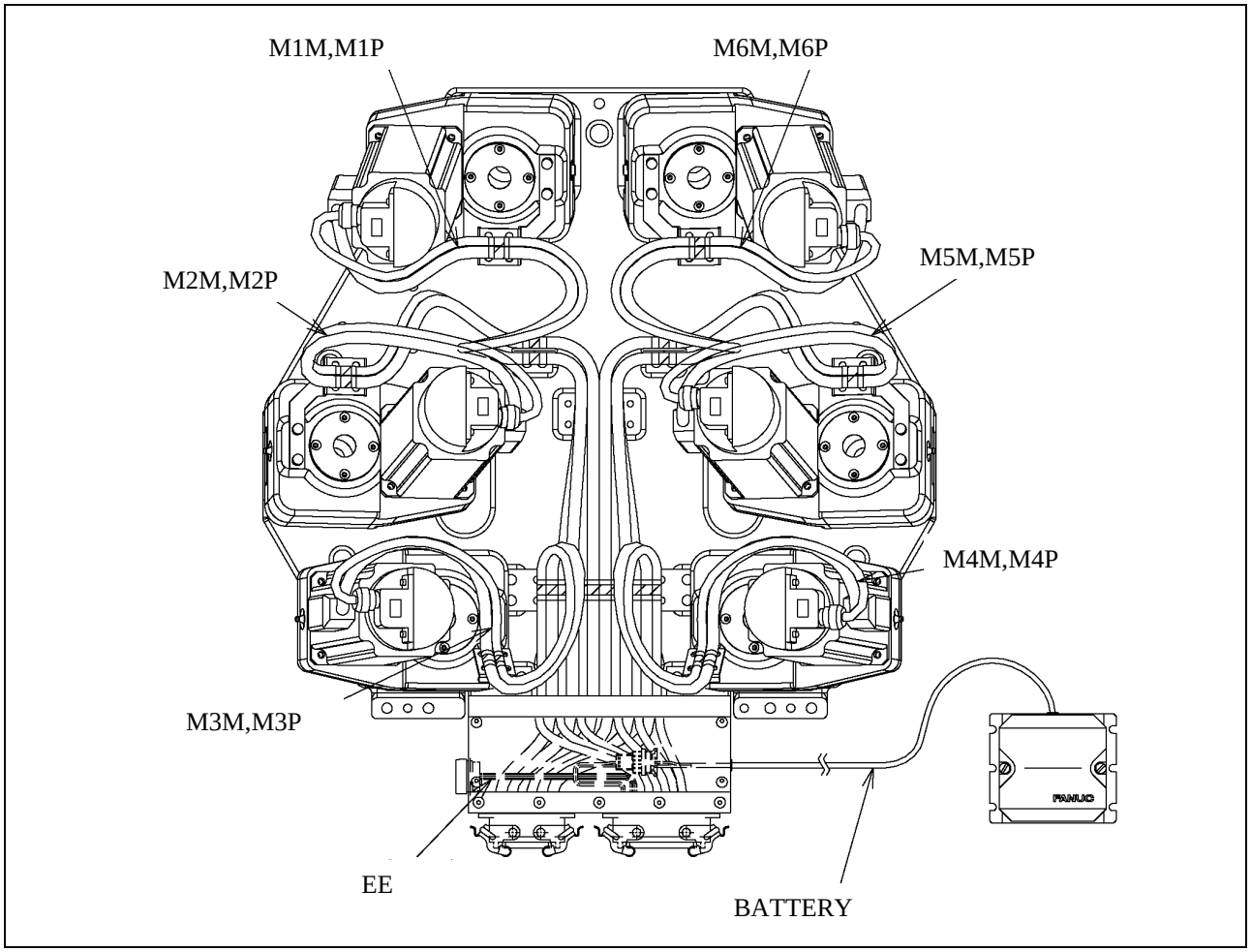

Fig.7.1 (a) Wiring diagram in mechanical unit

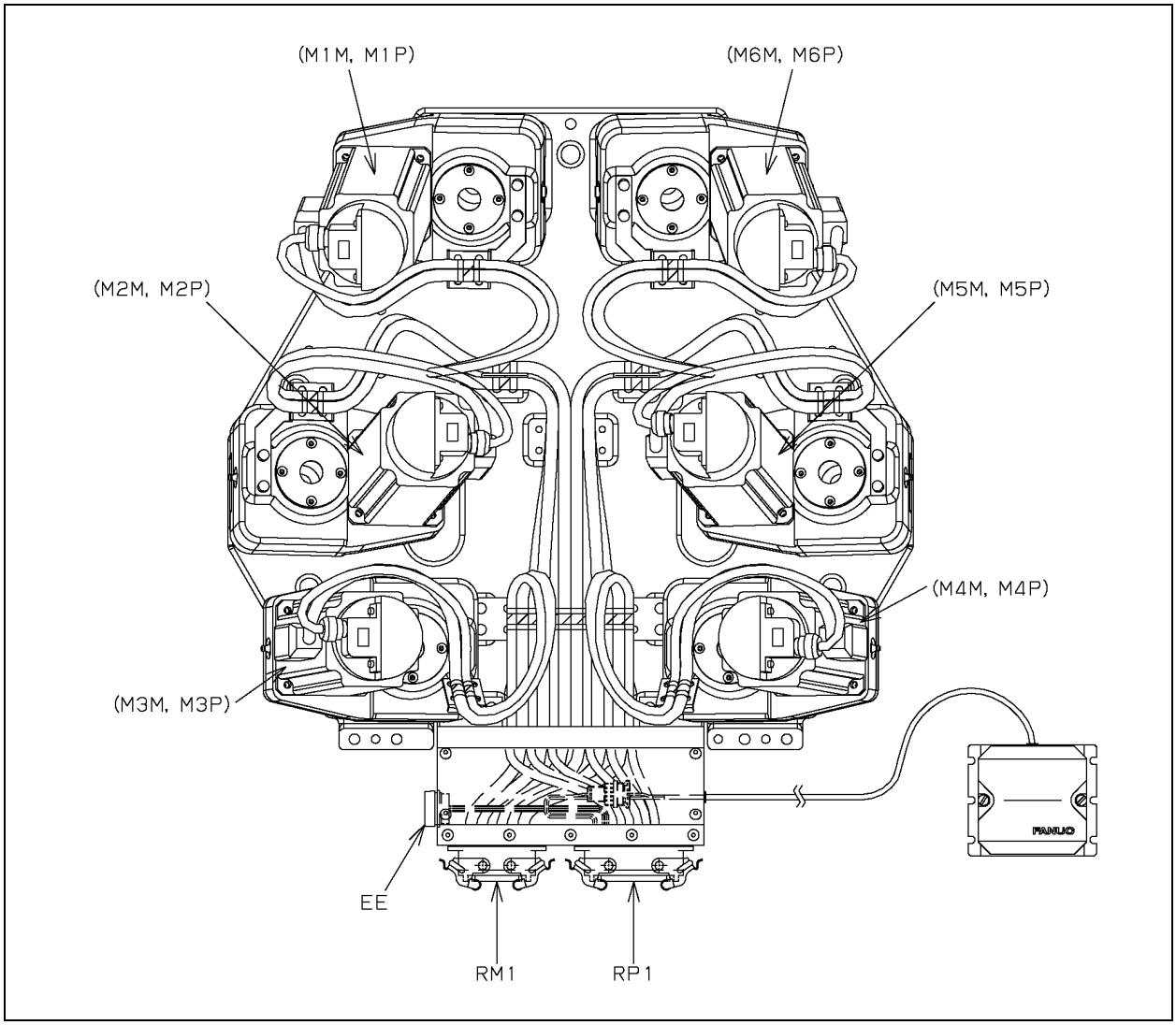

Fig.7.1 (b) Connector locations

8 REPLACING CABLES

Replace the cable in the cycle that is shorter among every four years and 15,360 hours operating. When the cable is broken or damaged, or shows signs of wear, replace it according to this chapter.

Precautions to be observed when handling the Pulsecoder cable

The Pulsecoder cable is provided with a marking tie, as shown below, to warn against disconnecting the cable during transportation, installation, or maintenance. If the cable with the marking tie is disconnected, mastering must be performed again. Therefore, do not disconnect the cable except when replacement of the cable is necessary.

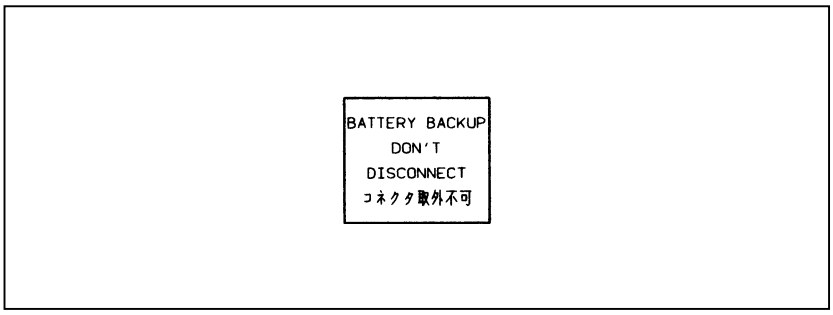

Fig.8 Marking tie

8.1 CABLE FORMING

Table 8.1 shows the cable clamp position.
When replacing cables, clamp the cable at the position specified in Table 8.1 using a clamp or a nylon band. Otherwise, cables are loosened or forcedly pulled to cause their disconnection. Refer to the figures in section 8.2 for the cable clamp position not listed in the Table.

Table 8.1 Cable clamp position

Mark	Cable clamp position	Mark	Cable No.
RM1	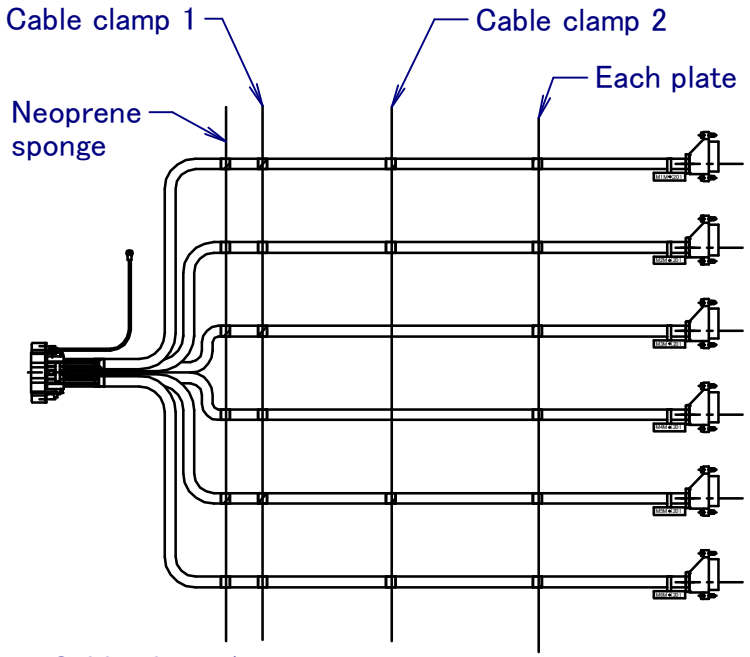	+ − M1M M2M M3M M4M M5M M6M	K201
RP1	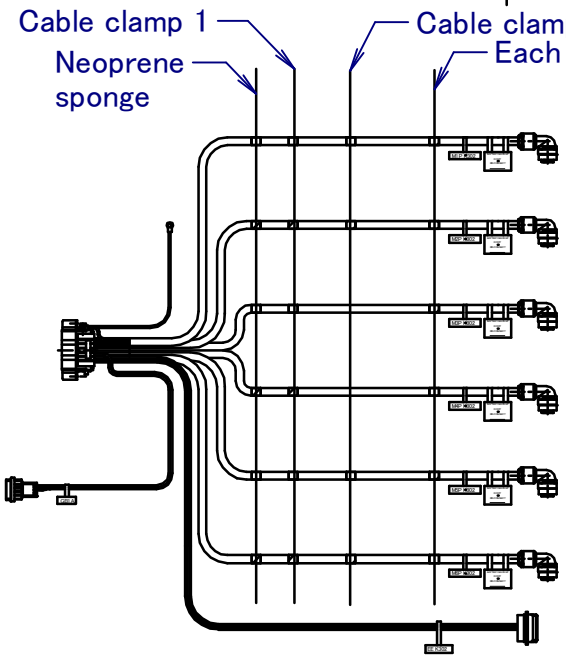	M1P M2P M3P M4P M5P M6P EE	K202 (R−J3iB) or K302 (R−30iA /R−30iB)
GB1	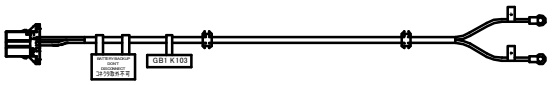	+ −	K103

8.2 CABLE REPLACEMENT

This section describes a procedure for periodically replacing all the mechanical unit cables.
If you need to replace a specific cable (because, for example, it is damaged), do so by referencing this section. See Section 7.1 for the configuration of the mechanical unit cables.
Cable replacement makes it necessary to perform mastering. Before attempting replacement, therefore, see Section 5.1.
The F-200iB has much wiring in its space. Before removing the cables, therefore, check how the cables run, with the robot at a posture with a length of 668 mm on all axes, by taking a picture or by other means.

Procedure for replacing cables K201, K202 and K302

Removal

1 Remove the full cover (option) from the robot where applicable (see Section 6.5).
2 Record the Quick Master Reference Position referring to Subsection 5.4.5 of MAINTENANCE. (It is set in 668mm for all axes when robot is shipped.)
3 Set the robot to a posture with a length of 668 mm on all axes and turn off the power to the controller.
4 Remove the controller cable from the connector panel located at the rear of the robot.
5 Remove the connectors from the motor.
6 Remove the nylon bands secured to the plates (plates 1, 2, and 3) of the gearbox for each axis.
7 Remove the nylon band secured to the plate (cable clamp 2) of the base plate.
8 Remove the nylon band secured to the plate (cable clamp 1) of the base plate.
9 Remove the connector panel cover, and remove the grounding cable and the housing from the connector panel. For K202 and K302, also remove the EE connector and the battery connector.

Assembly

1 Mount new cables to the connector panel as shown in Fig. 8.2 (c).
2 Connect the cables as shown in Fig. 8.2 (a). Secure each cable to the corresponding plate of the base plate at the marking position with a nylon band. Secure the cables for all axes to cable clamp 1 and the cables for the J1-, J2-, J5-, and J6-axes to cable clamp 2.
3 Secure each cable to the corresponding plate (plate 1, 2, or 3) of the gearbox for each axis at the marking position with a nylon band.
4 Mount the connectors to the motor.
5 Mount the controller cable to the connector panel.
6 Perform quick mastering.
7 Remount the full cover (option) to the robot where applicable (see Section 6.5).

NOTE

Run each cable with great care so that its movable part does not come in contact with the casting of the base plate and the gearbox. After connection, check the cables during operation because, even if the movable part does not come in contact while the robot is stationary, it may come in contact during operation depending on the operating posture.
In particular, the play portions on the J2- and J5-axes (See Fig. 8.2 (a)) must be formed upward so that they not come in contact with the base plate.

Procedure for replacing cable K103

Removal

1 Press the emergency stop button to perform the procedure while the power is on. Note that if the power is turned off, mastering is required.
2 Remove the battery box from the battery case.

3 Remove the +/- terminal and the nylon band secured to the battery box.
4 Remove the cable from the battery case, together with the rubber bushing located on the boundary between the battery case and the outside.
5 Remove the connector panel cover. Remove the connector connected to K202 and the nylon band secured to the connector panel.
6 Remove the cable from the connector panel, together with the rubber bushing located on the boundary between the connector panel and the outside.

Assembly

1 Remove the +/- terminal rubber bushing from a new cable.
2 Run the +/- terminal from the inside of the connector panel through the K203-mounting hole.
3 Mount the connector rubber bushing to the connector panel and secure it to the connector panel with a nylon band.
4 Connect the cable to the K202 (or K302) connector and secure it with a nylon band so that the connector is not disconnected.
5 Mount the connector panel cover.
6 Mount the rubber bushing, removed in 1, to the cable again.
7 Run the +/- terminal from the outside of the battery case and mount the rubber bushing to the K103-mounting hole of the battery case.
8 Mount the +/- terminal of the new cable to the battery box and secure it with a nylon band.
9 Secure the battery box to the battery case.

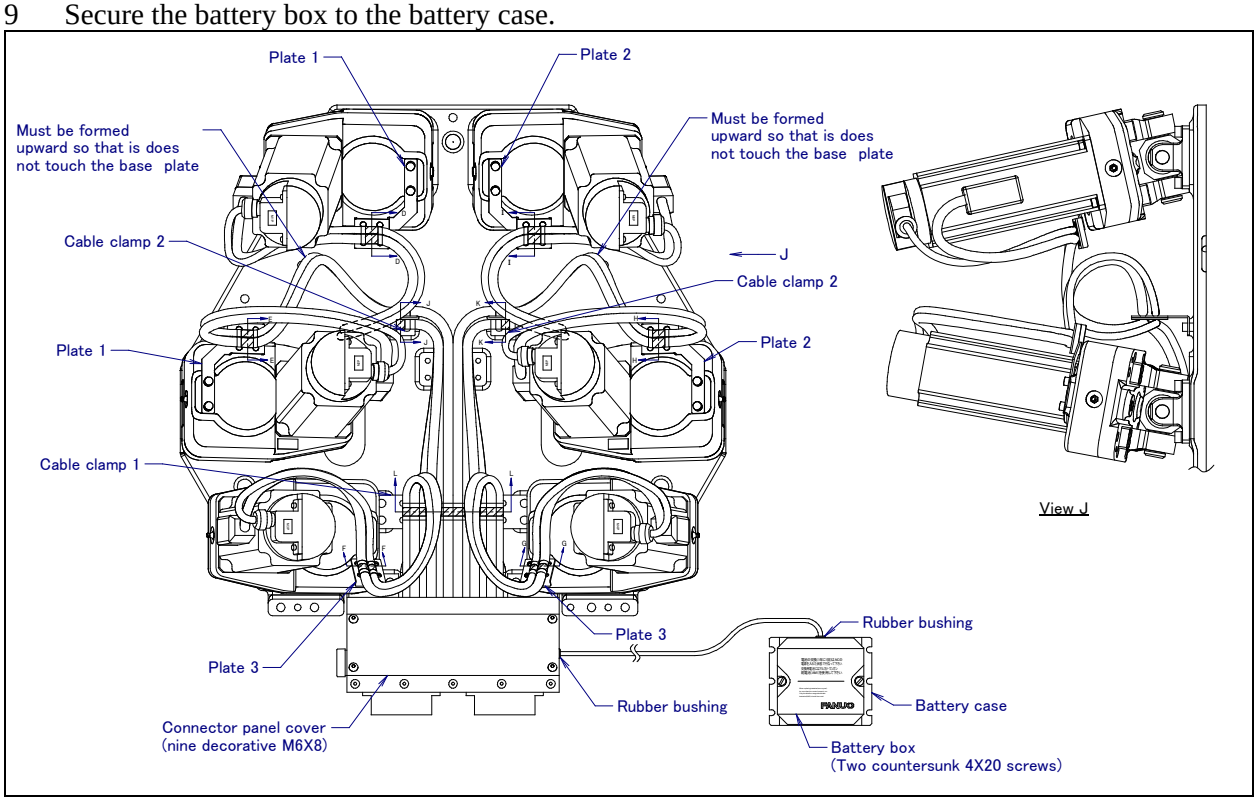

Fig.8.2 (a) Replacing the cable

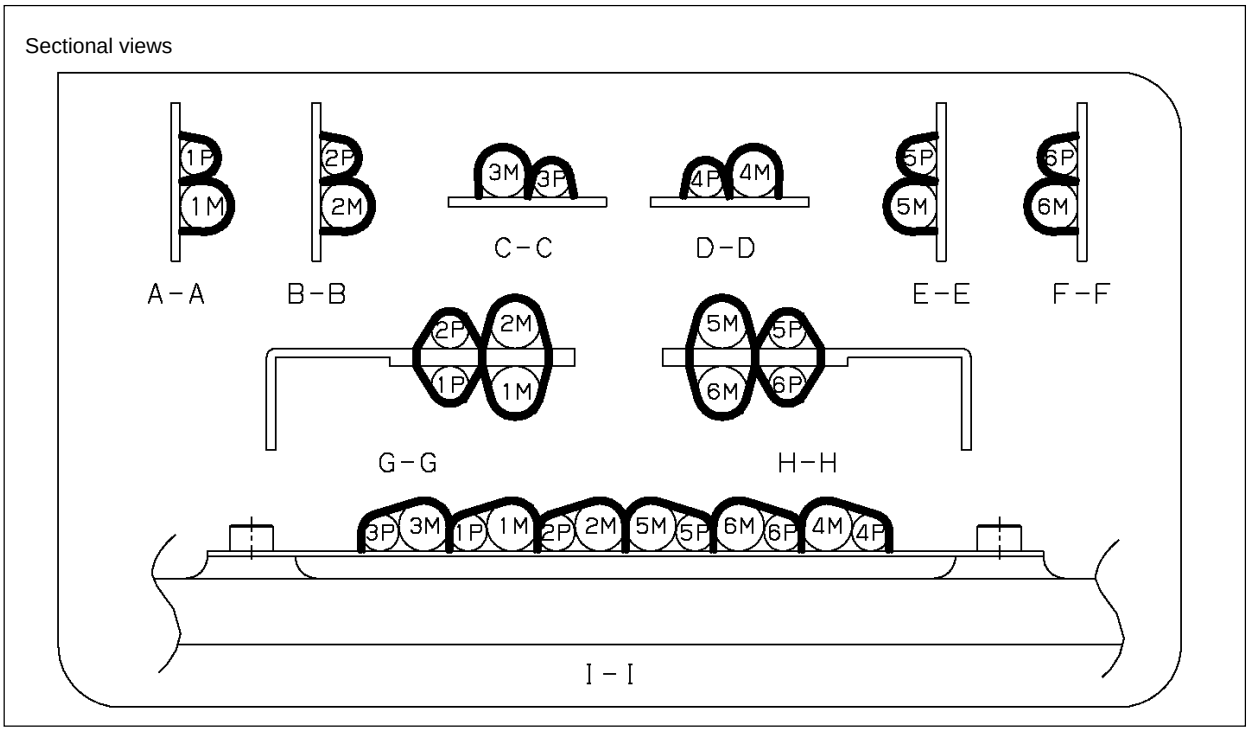

Fig.8.2 (b) Replacing the cable

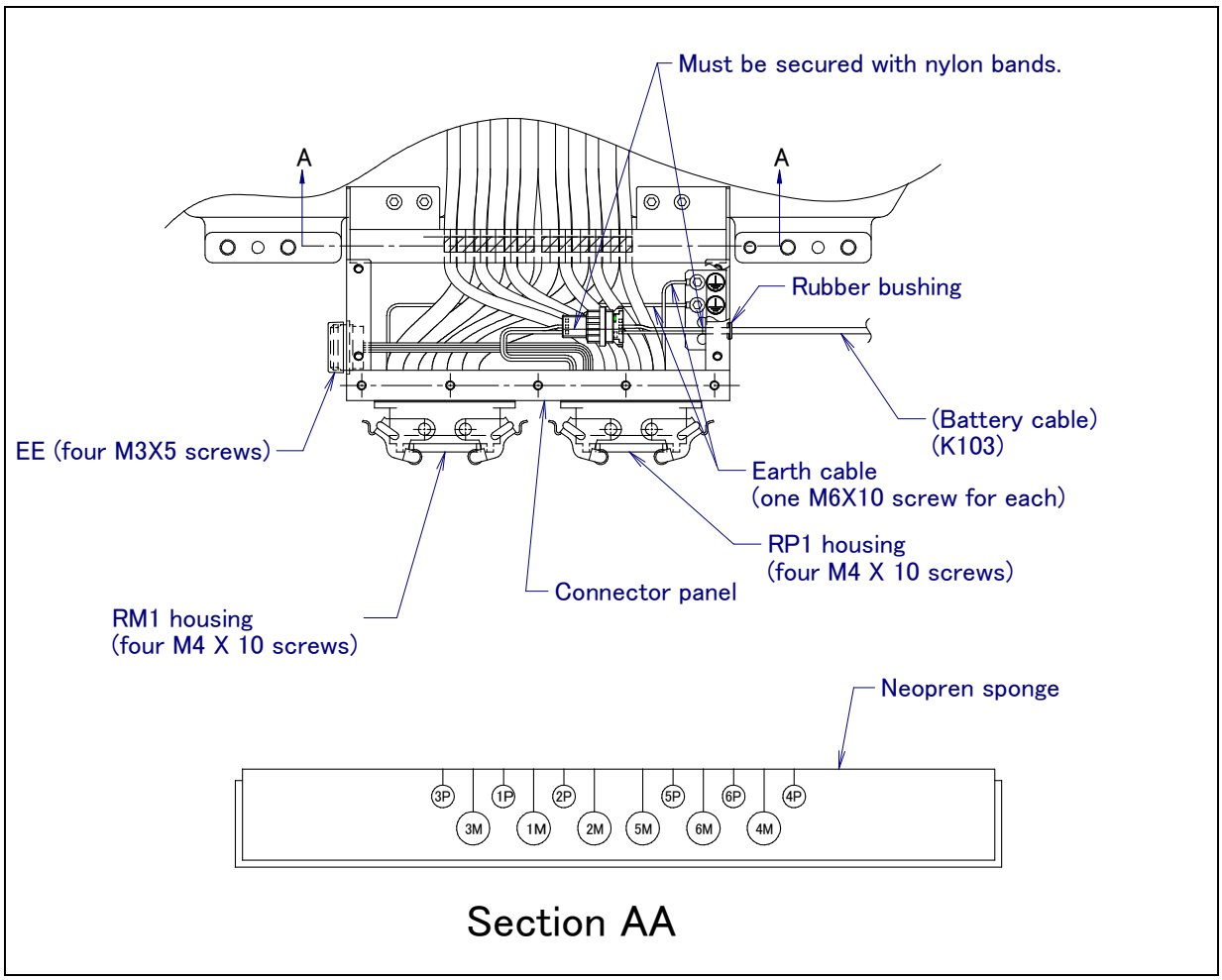

Fig.8.2 (c) Replacing the cable

II. CONNECTION

1 ROBOT INTERFERENCE AREA

Fig.1 (a) shows the external dimensions of the robot.
When installing peripheral devices, be careful to clear away any objects that are in the robot's motion path in normal operation. Fig.1 (b) shows the operation range of the robot.

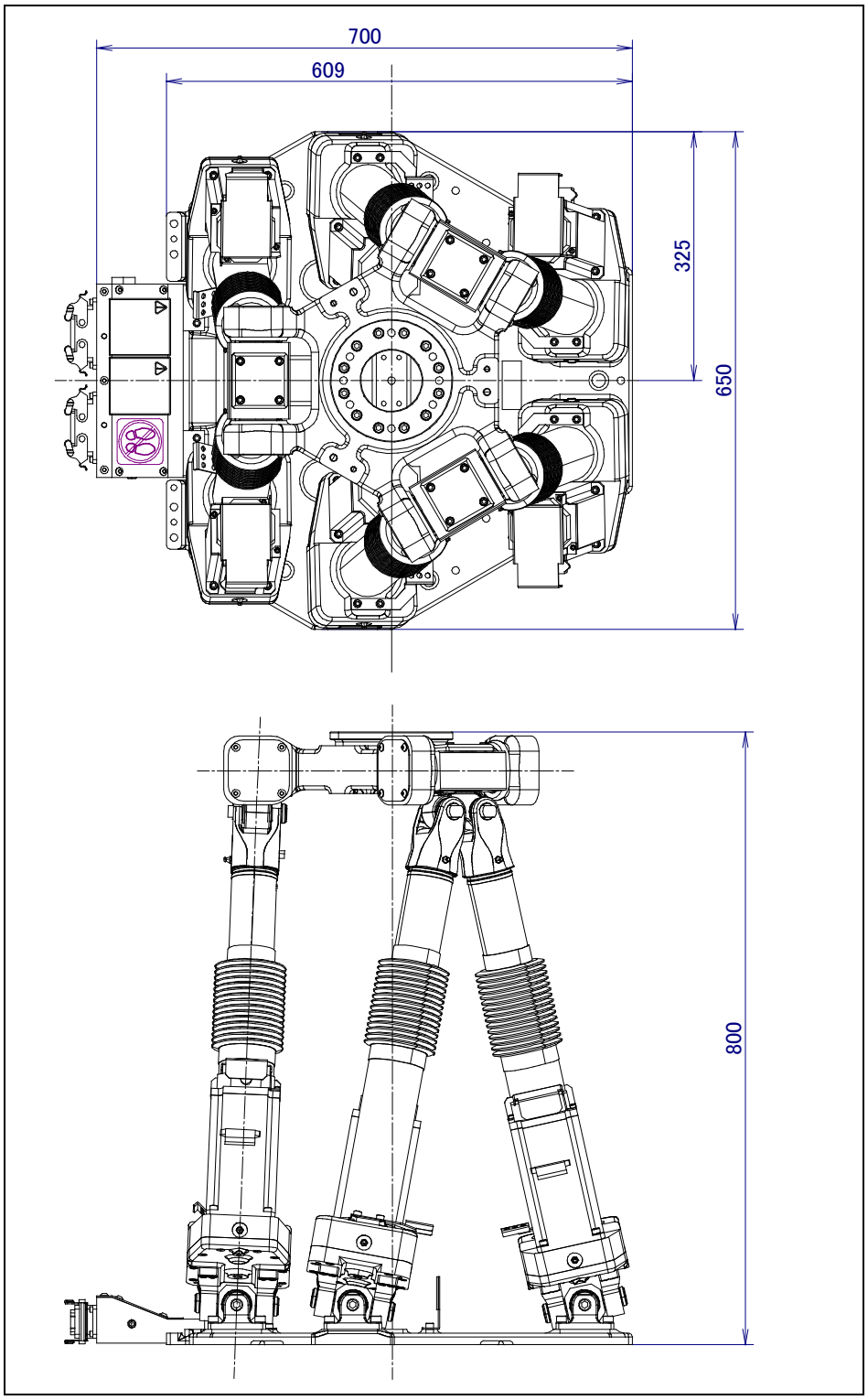

Fig.1 (a) Mechanical unit operation area

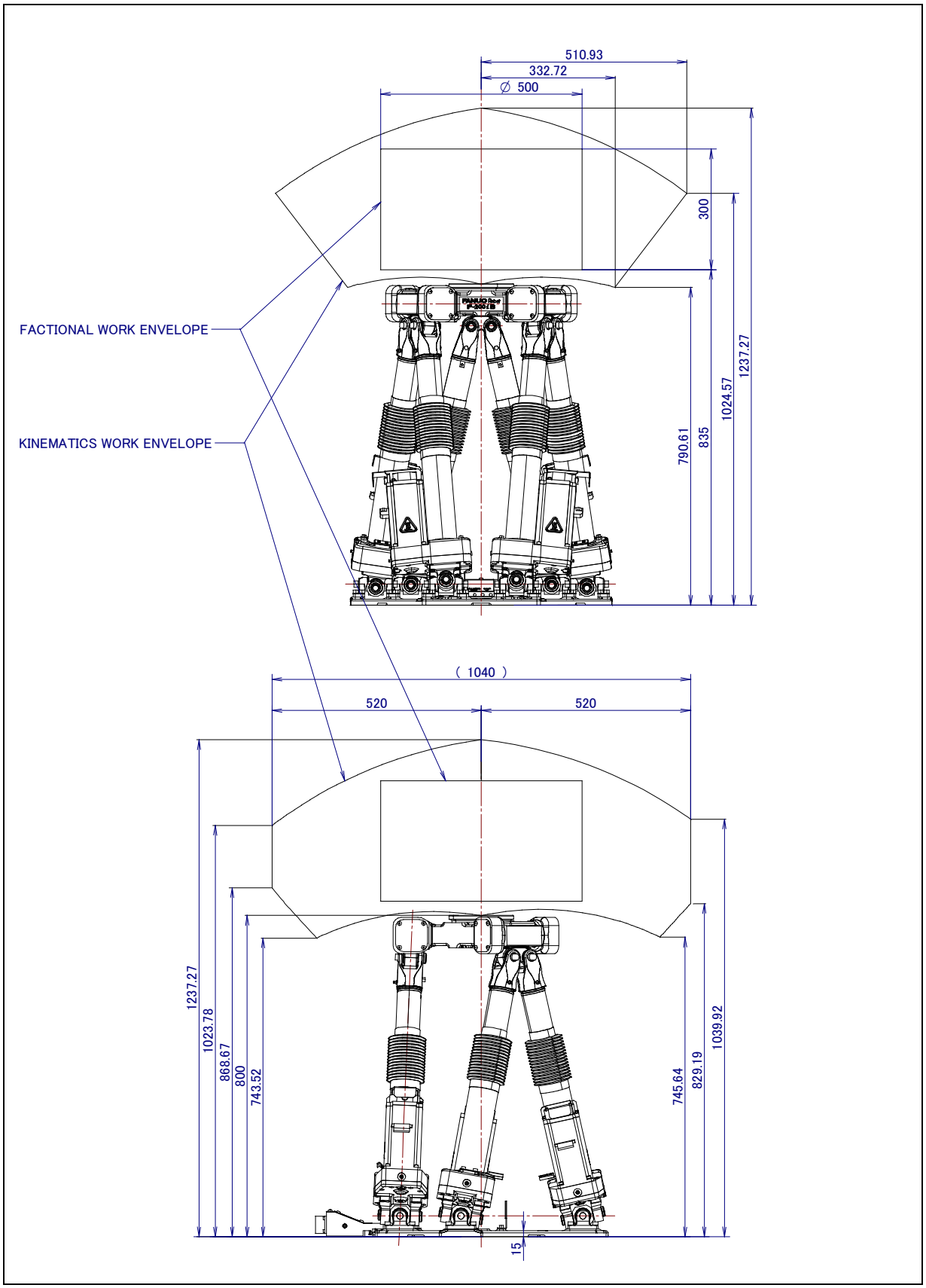

Fig.1 (b) Robot operation area

2 MECHANICAL COUPLING TO THE ROBOT

2.1 WRIST LOAD CONDITIONS

Fig.2.1 is diagram to limit loads applied to the wrist. Apply a load within the region indicated in the graph.

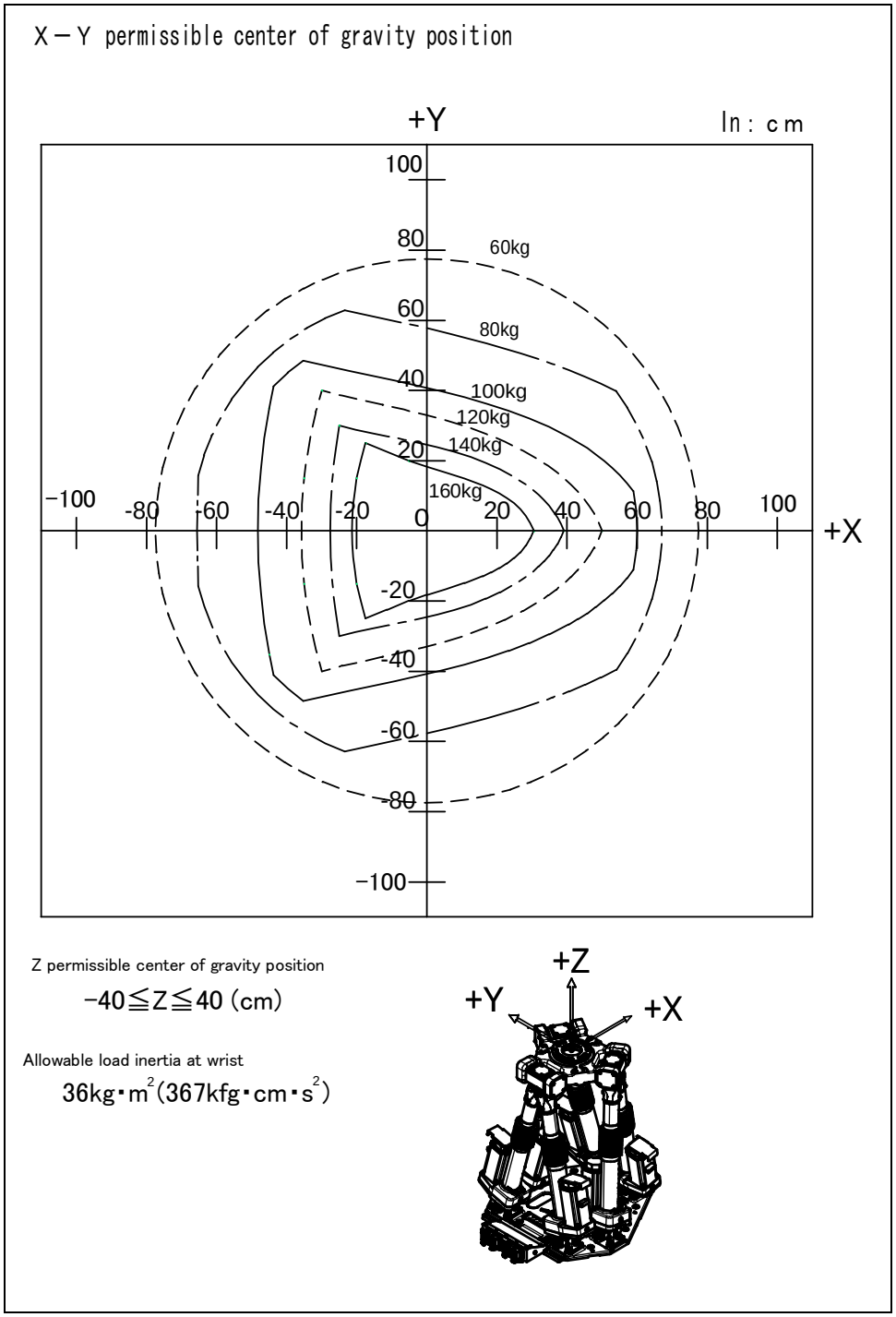

Fig.2.1 Wrist load diagram

2.2 MECHANICAL COUPLING OF END EFFECTOR TO WRIST

Fig.2.2 (a) to (d) are the diagram for installing end effectors on the wrist.
To fasten the end effector, first position it with two pin holes at C using fitting A or B, then lock it using six tapping screws at D. Select screws and positioning pins of a length that matches the depth of the tapped and pin holes.

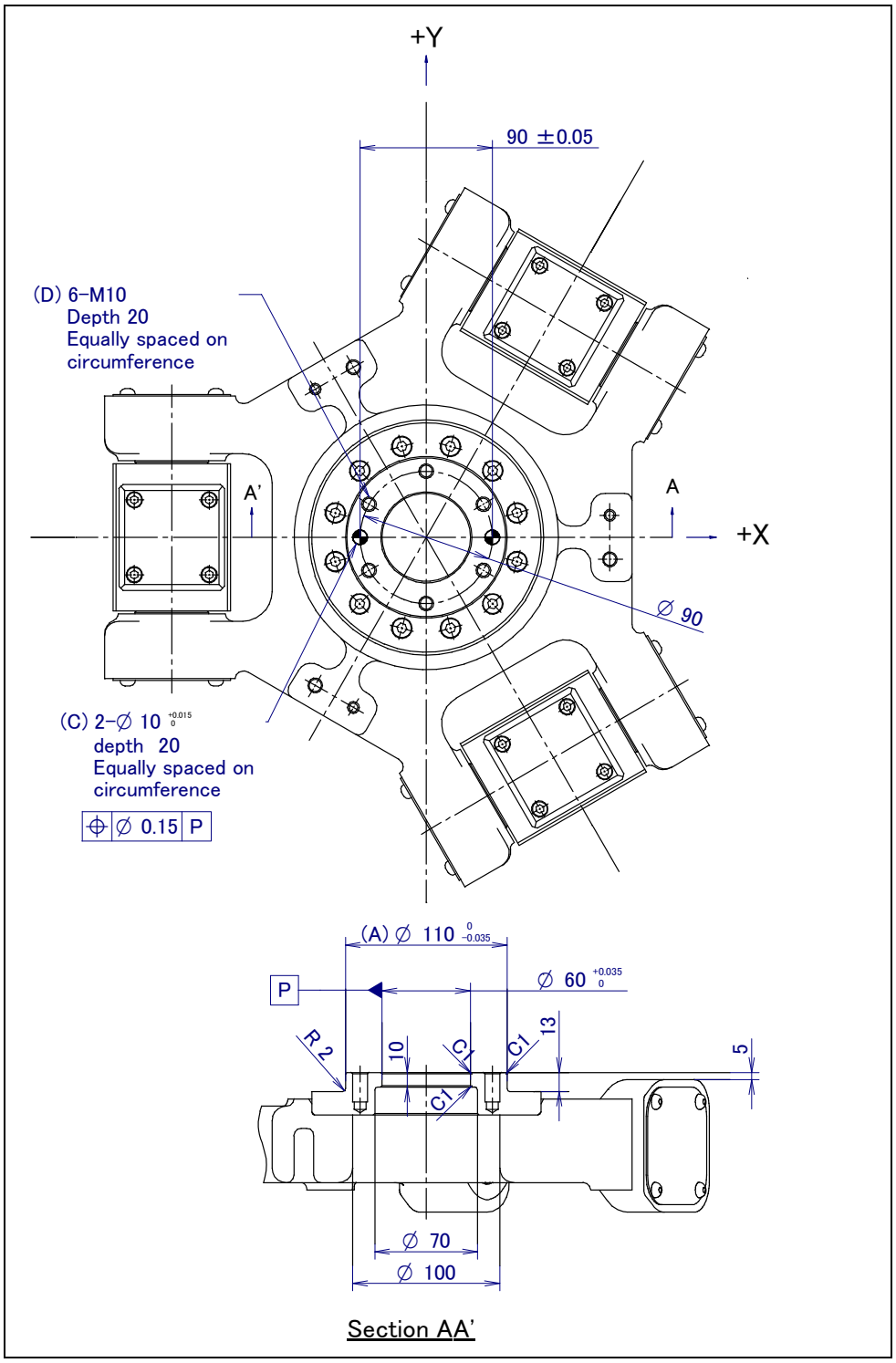

Fig.2.2 (a) End effector mounting face (standard flange)

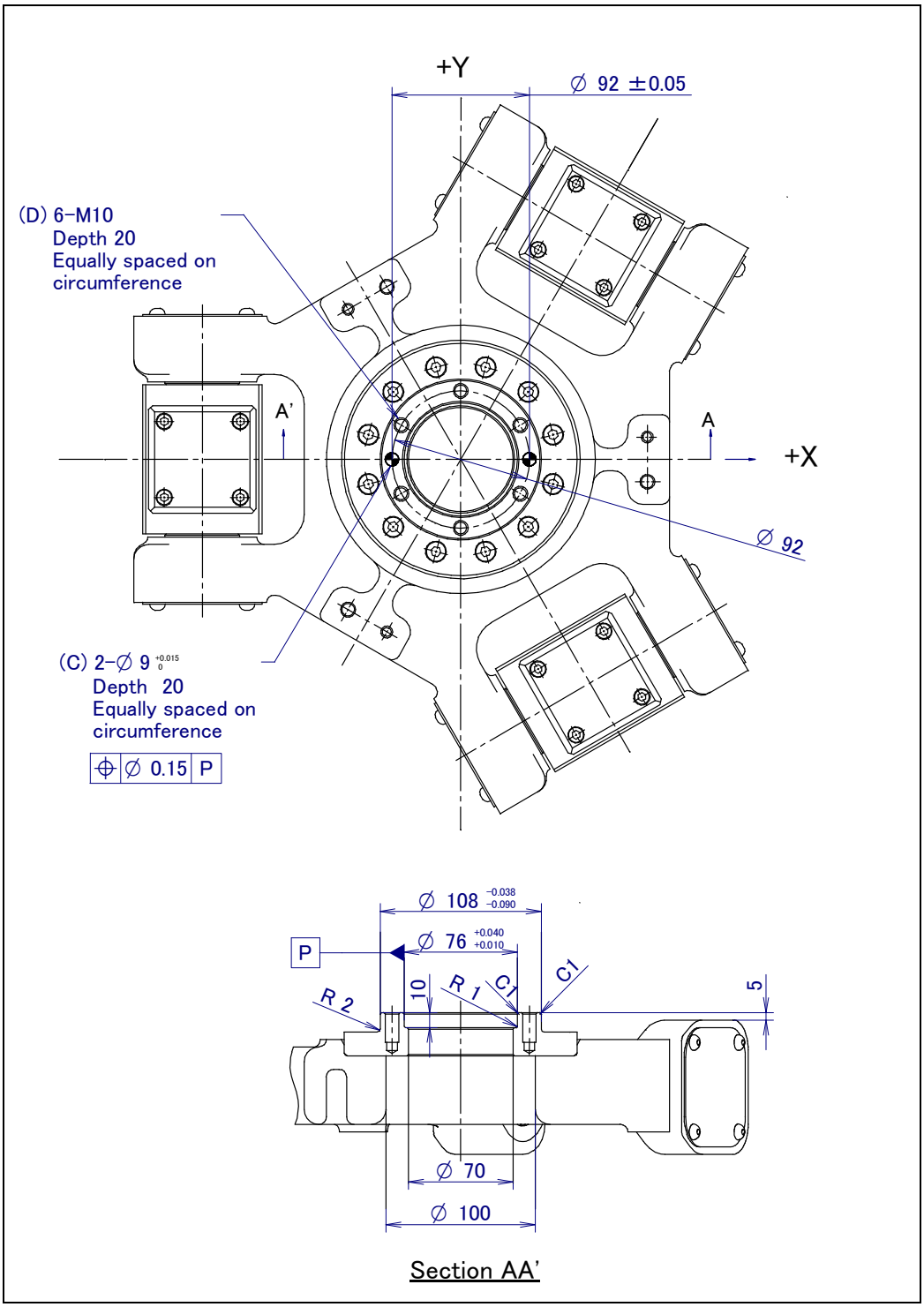

Fig.2.2 (b) End effector mounting face (special flange)

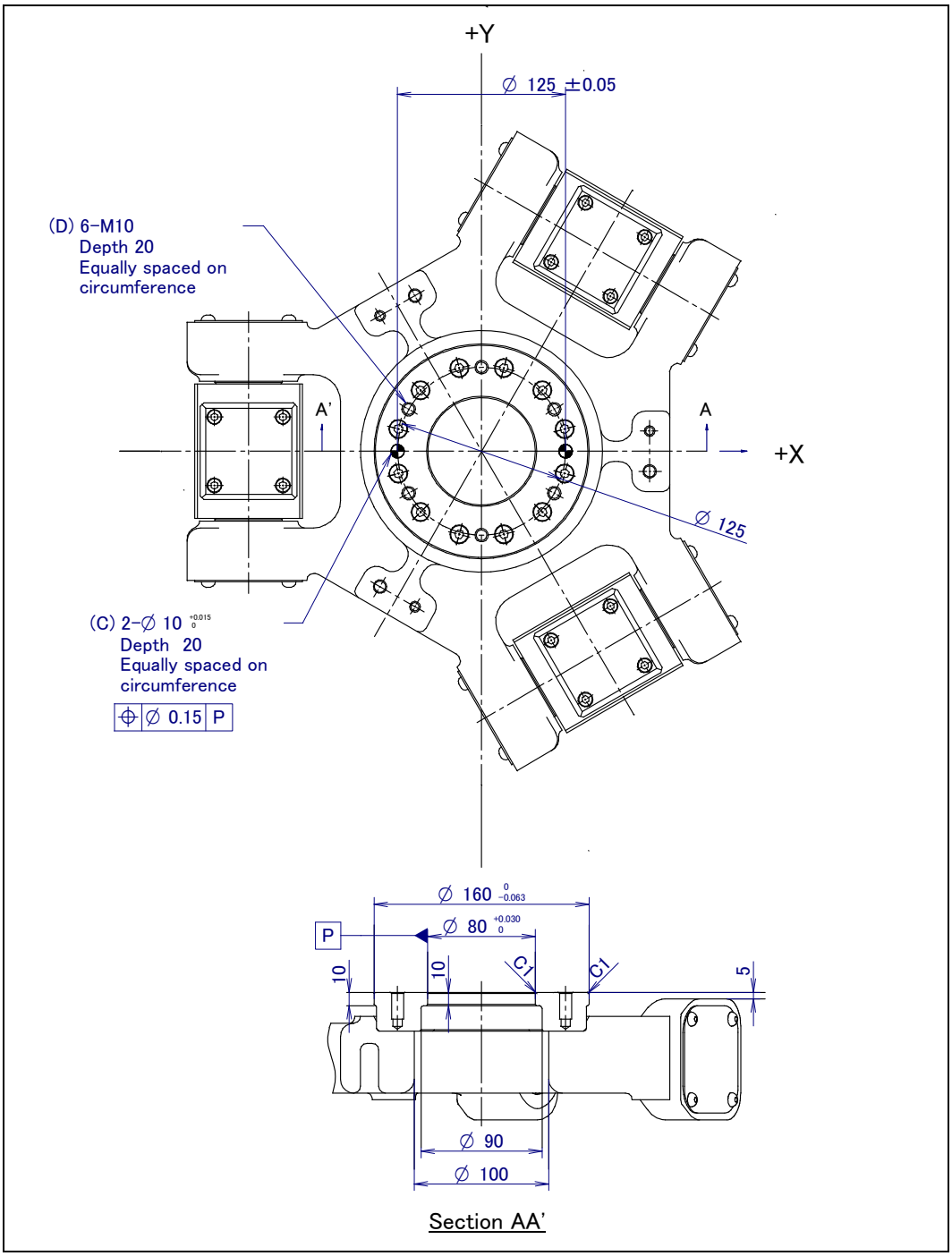

Fig.2.2 (c) End effector mounting face (ISO flange-not insulated)

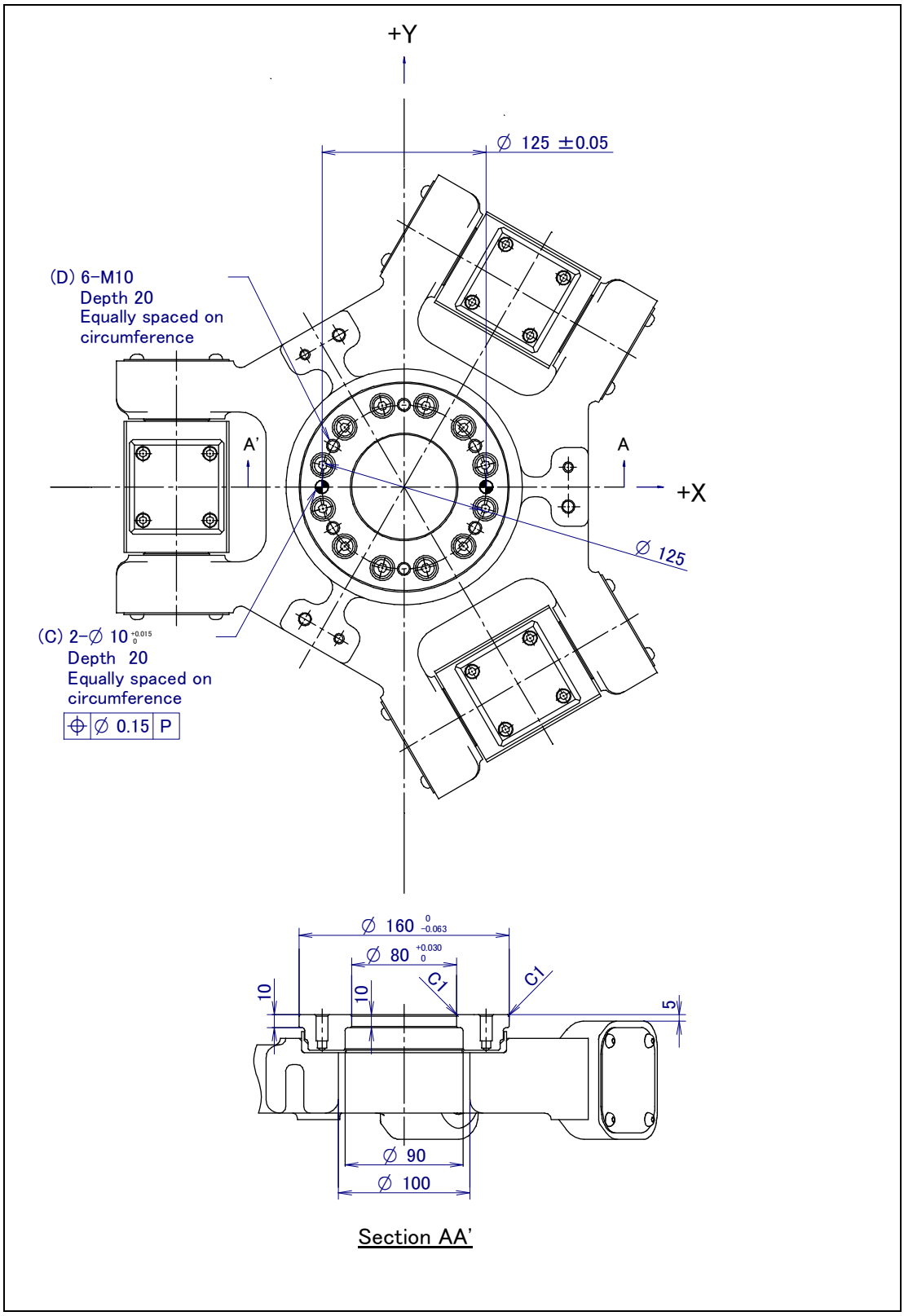

Fig.2.2 (d) End effector mounting face (insulated ISO flange)

2.3 SETTING THE LOAD

Enter the mass and the inertia of the hand mounted to the wrist, as described below:

(1) Press MENUS to display the screen menu.
(2) Press zero for next screen and select SYSTEM.
(3) Press F1, TYPE, to display the screen switching menu and select variable.
(4) Select item MOTION. The load setting number selection screen is displayed. Select the load setting number used.
(5) Press F3, DETAIL, to display the load setting screen.
(6) Enter the load weight, the position of the center of gravity of the load, and the load inertia. The load weight and the load inertia, as used here, refer to the X, Y, and Z coordinates and the inertia about the X-, Y-, and Z-axes in the absolute coordinate system with its origin at the center of the flange, with the robot being set to a posture with zero degrees.

MOTION/PAYLOAD SET				JOINT 10%
				1/8
	Group 1			
1	Schedule No [1]:		[	]
2	PAYLOAD		[kg]	100.00
3	PAYLOAD CENTER	X	[cm]	60.00
4	PAYLOAD CENTER	Y	[cm]	0.00
5	PAYLOAD CENTER	Z	[cm]	0.00
6	PAYLOAD INERTIA	X	[kgfcms^2]	361.00
7	PAYLOAD INERTIA	Y	[kgfcms^2]	0.00
8	PAYLOAD INERTIA	Z	[kgfcms^2]	361.00

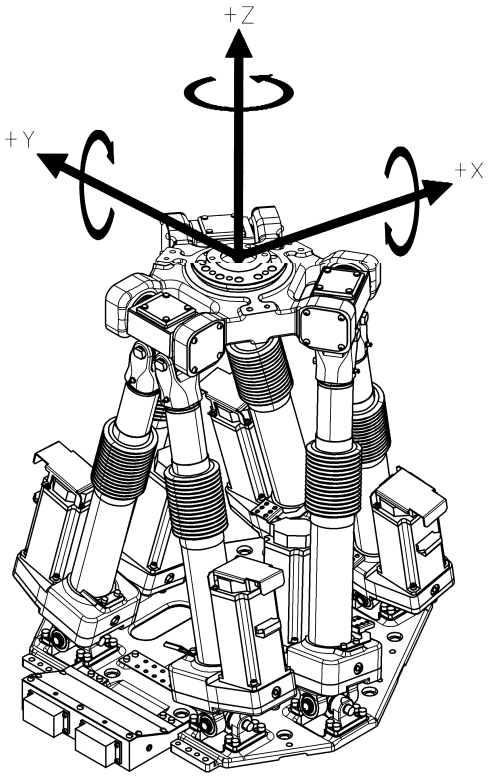

Fig.2.3 Setting load

2.4 END EFFECTOR INTERFACE

⚠ WARNING

- Use mechanical unit cables that have required user interface.
- Don't add user cable or hose to inside of mechanical unit.
- Please do not obstruct the movement of the mechanical unit cable when cables are added to outside of mechanical unit.
- Please do not perform remodeling (Adding a protective cover and fix an outside cable more) obstructing the behavior of the outcrop of the cable.
- Please do not interfere with the other parts of mechanical unit when equipment is installed in the robot.
- Cut unnecessary length of wire rod. Make insulation processing like winding acetate tape. (See Fig.2.4 (a))
- If you can not prevent electrostatic charge of work and end effector, keep away an end effector (a hand) cable from an end effector and a work as much as possible, when wiring it. When they come to close unavoidable, make insulation processing between them.
- Be sure to seal connectors of hand side and robot side and terminal parts of cables, to prevent water from entering the mechanical unit. Also, attach cover to unused connector.
- Check looseness of connector and wound of coating of cables routinely.

When these attentions are not kept, unexpected troubles might occur.

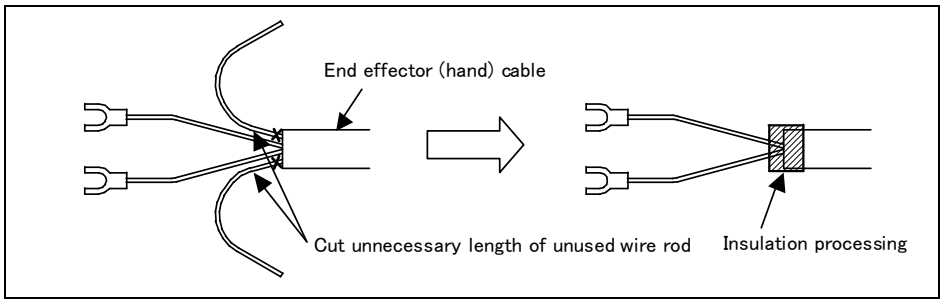

Fig.2.4 (a) Treatment method of end effector (hand) cable

Fig. 2.4 (b) shows the position of the optional cable interface.
The end effector (RDI/RDO) or (RI/RO) is provided as standard.

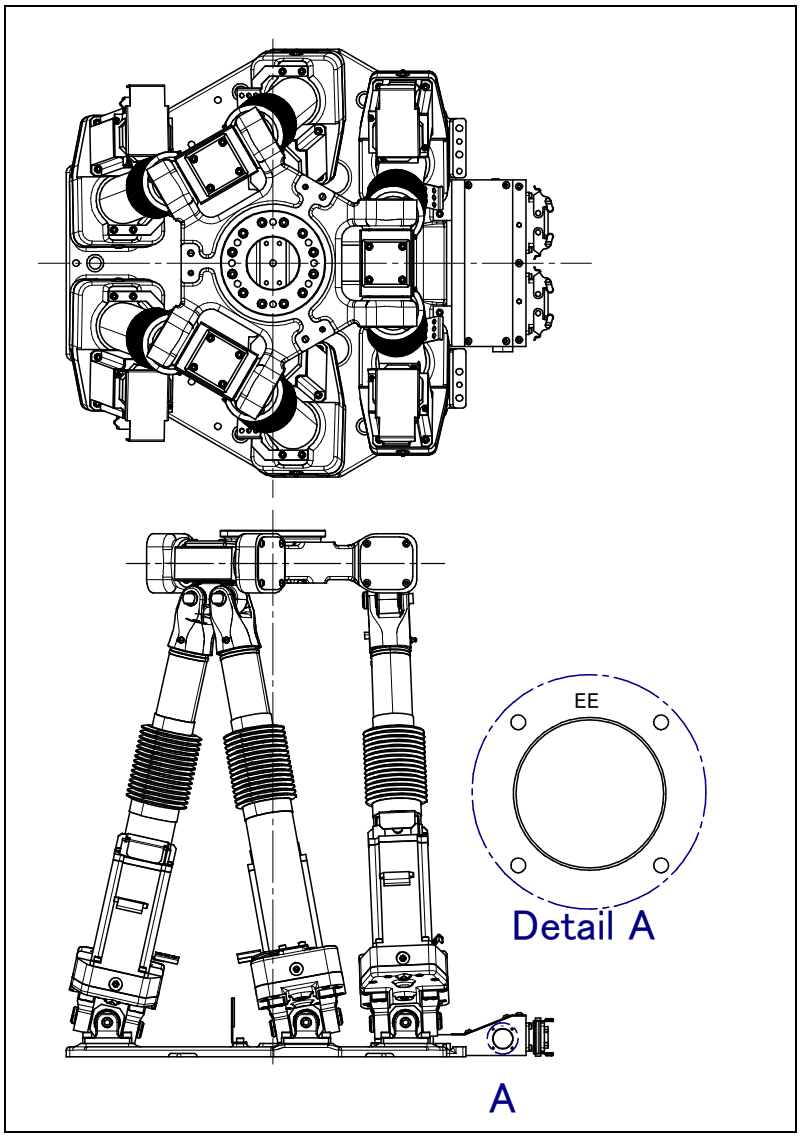

Fig.2.4 (b) Position of the EE interface

Fig. 2.4 (c) and (d) show the pin arrangement of the EE interface (RDI/RDO) or (RI/RO).

> ⚠ **WARNING**
> The RDO signal for the R-J3*i*B controller and the RO signal for the R-30*i*A/R-30*i*B controller are incompatible with each other because different output formats are used. For details, refer to the Chapter 4 of CONNECTION of controller maintenance manuals.

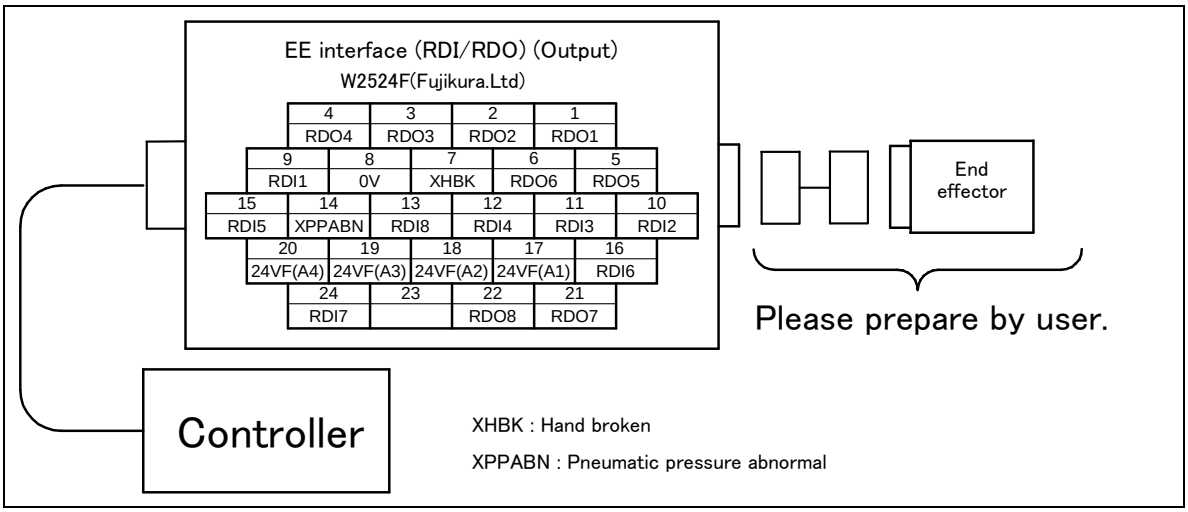

Fig. 2.4 (c) Pin arrangement (R-J3*i*B) of the EE interface (RDI/RDO).

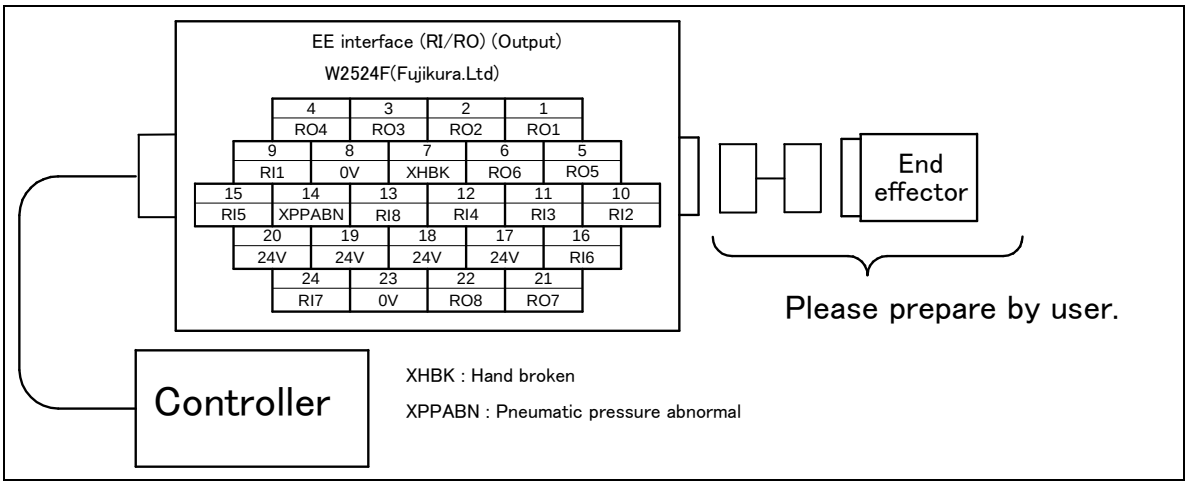

Fig. 2.4 (d) Pin arrangement (R-30*i*A/R-30*i*B) of the EE interface (RI/RO).

Connector specifications

Table 2.4 (a) Connector specifications (Mechanical Unit)

Cable name	Output (connector panel)	Maker/Dealer
RDI/RDO or RI/RO	JMR2524F	Fujikura.Ltd

Table 2.4 (b) Connector specifications (User)

Cable name	Output (connector panel)	Maker/Dealer
RDI/RDO or RI/RO	JMSP2524M straight plug (supplied) (FANUC spec.: A63L-0001-0234#S2524M) JMLP2524M angle plug	Fujikura.Ltd

NOTE

For details of dimensions and for other information, refer to the catalog available from the manufacturer or contact FANUC.

3 TRANSPORTATION AND INSTALLATION

3.1 TRANSPORTATION

1) Transportation using a crane
The robot can be transported by lifting it. When transporting the robot, be sure to change the posture of the robot to that shown in Fig.3.1 (a) and lift by attaching sling to the three M10 eyebolts.

2) Transportation using a forklift
The robots can also be transported using a forklift (Refer to Fig.3.1 (b)). Transport materials are available as an option.

⚠CAUTION
For the F-200*i*B, the battery case is separate and, therefore, transport the robot with the battery case secured to the connector panel together with the cable of about 7 m, as shown in Fig. 3.1 (a) and (b).

⚠WARNING
When tools or additional units are attached, the center of gravity of the robot deviates, possibly causing instability during transportation. If the robot becomes unstable, remove the tools and take the transportation posture. This returns the center of gravity to the normal position. It is recommended that tools and additional units be transported separately from the robot.

The forklift transportation materials can be used only for transportation with a forklift. Do not use the forklift transportation materials for other transportation means. Do not use the transportation materials to fix the robot.

Before transporting the robot with the transporting materials, check the fixing bolts of the transportation materials and tighten the loose bolts.

Do not lift using forklift or crane with base plate attached.

NOTE) 1.Machine weight is approximately 190kg
2. Eyebolts complied with JISB 1168.
3. Quantity eyebolt 4
sling 4
4.Do not ship with a tool exceeding the rated load attached.
5.Do not lift robot with a plate attached.

Robot posture on transportation

J1 AXIS	668 mm
J2 AXIS	668 mm
J3 AXIS	668 mm
J4 AXIS	668 mm
J5 AXIS	668 mm
J6 AXIS	668 mm

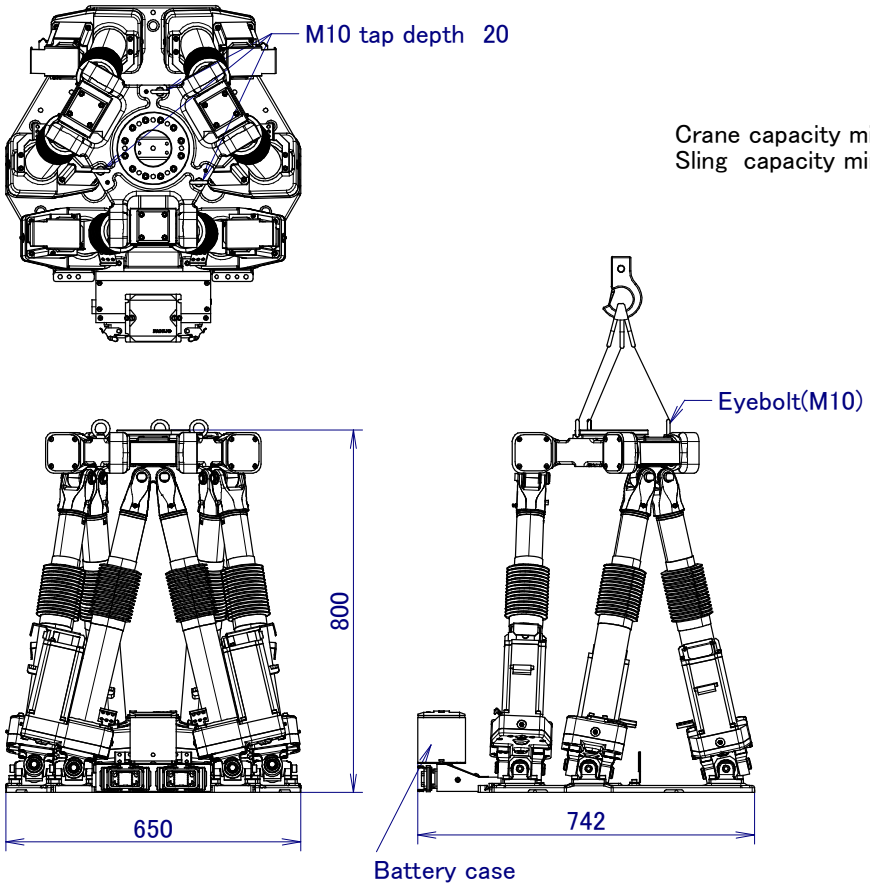

Fig.3.1 (a) Transportation using a crane

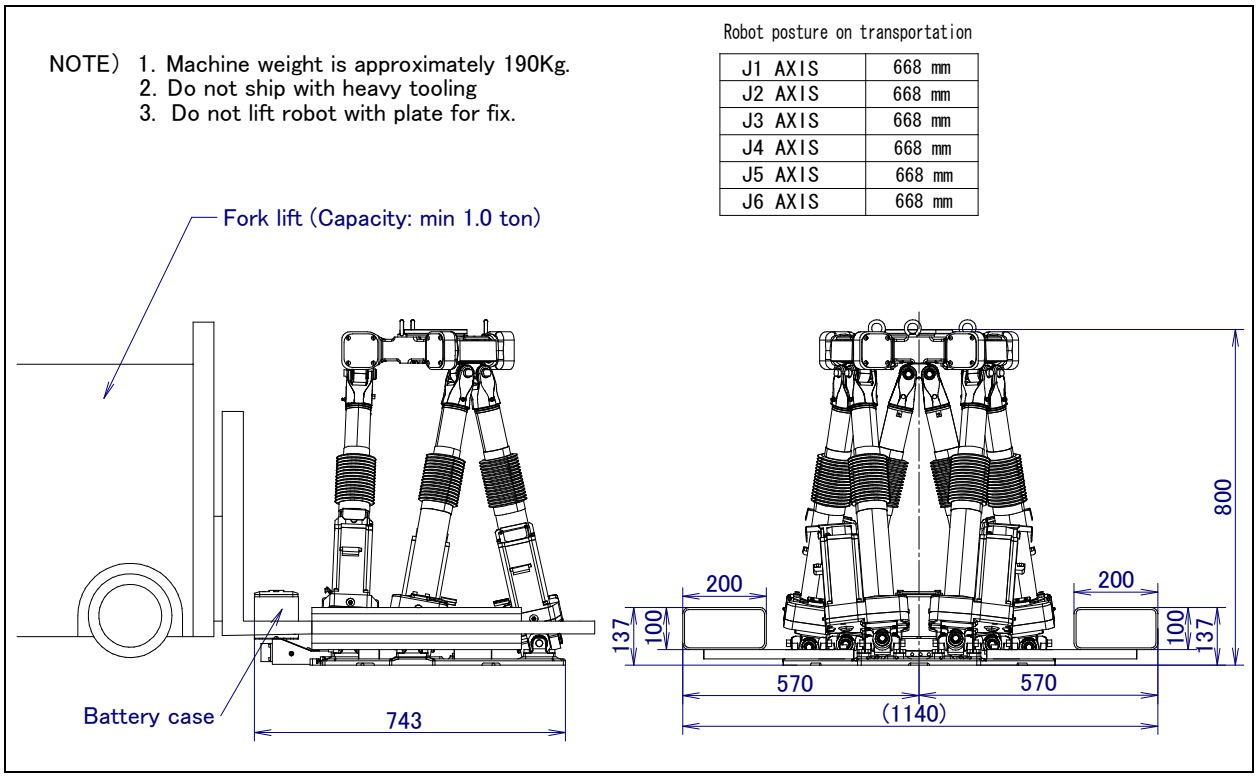

Fig.3.1 (b) Transportation using a forklift

3.2 INSTALLATION

Fig.3.2 (a) shows the robot base dimensions. Fig.3.2 (b) shows actual examples of robot installation.
In Fig.3.2 (b), the floor plate is imbedded in concrete and fastened with four M20 (strength classification 4.8) chemical anchors. Also fasten the block to the robot base using nine M16×35 bolts (strength classification 12.9). Next, position the robot, and weld the base plate to the floor plate. (Foot length is 10 to 15mm.)
Use hexagon socket bolts as the M16×35 bolts and embed their heads in the counterbored holes without placing washers.
It is recommended that the flatness of the block be 0.01 (Blocks are provided as options.)

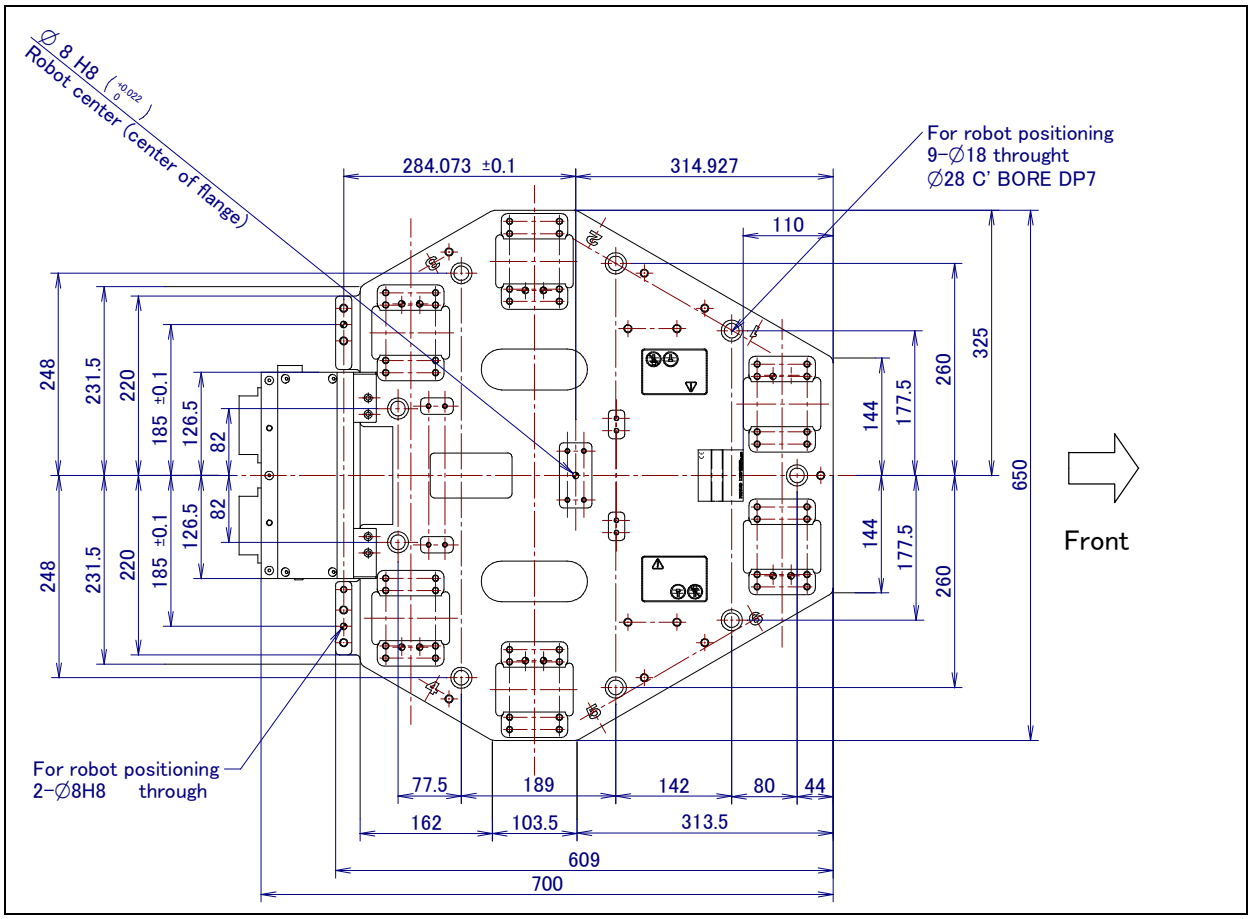

Fig.3.2 (a) Dimensions of the robot base

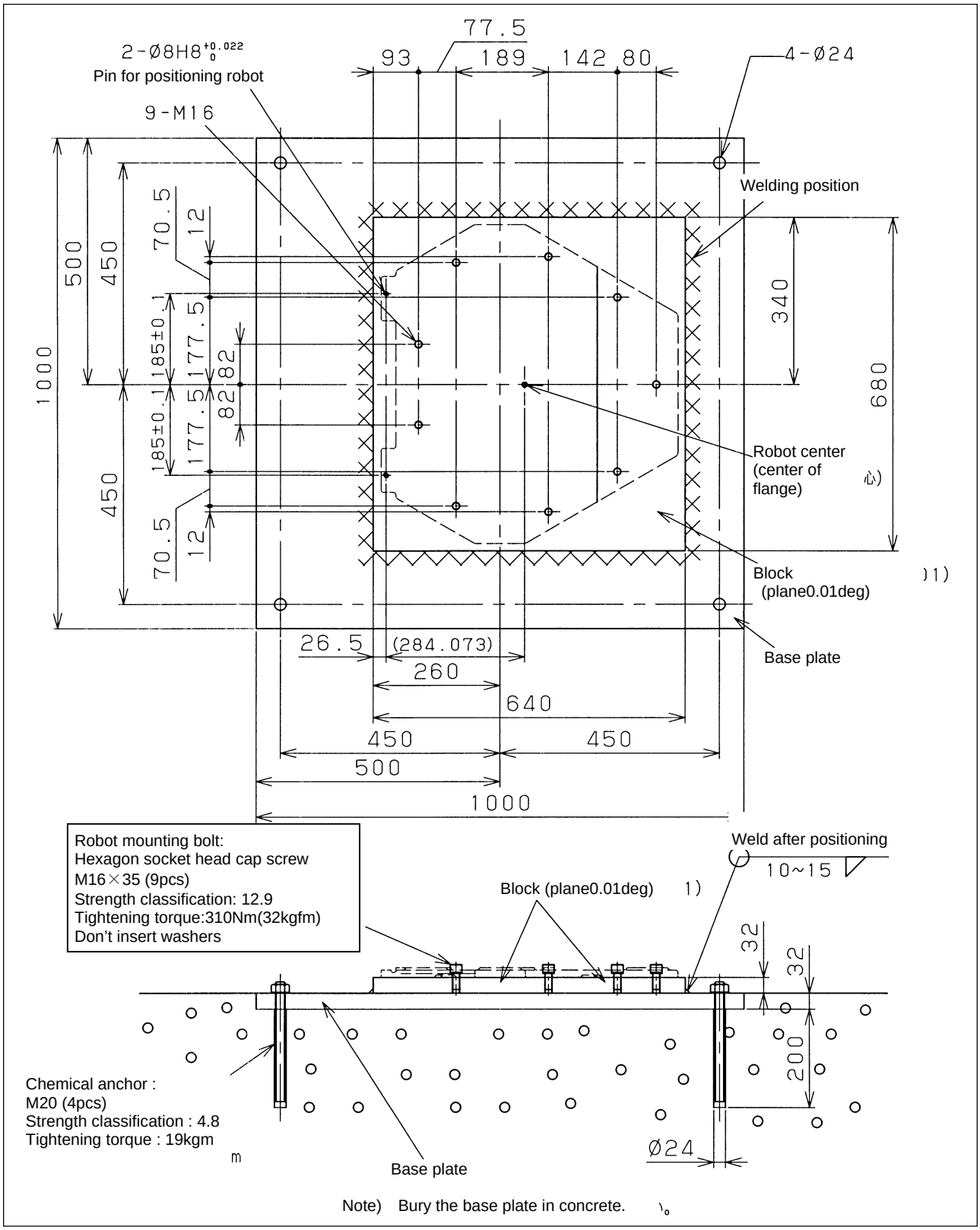

Fig.3.2 (b) Actual installation example

⚠CAUTION

1 Parts to be provided by the customer:
- Robot mounting bolts :
  Hexagon socket head cap screw
  (Strength classification 12.9) 9pcs.
- Chemical anchors : M20 (strength classification 4.8) 4pcs.
- Block : thickness 32t 1pcs.
- Floor plate : thickness 32t 1pcs.
- Straight pin : $\phi 8$ 2pcs.

2 Please use hexagon socket head cap screw for the robot mounting bolt, and bury the bolt head into the bore without washers.

3 Peripheral device parts, such as connection cables for devices, should not be place on the robot base. Don't operate the robot with maintenance tools or any foreign objects on the robot. It will cause damage of mechanical unit by interference.

4 Daily cleaning of the robot base to be performed, especially the robot is placed in an environment that suffers a large accumulation of foreign matters. In such severe environment, full cover option is recommended to avoid interference trouble.

5 Installation work (welding, anchoring, etc.) is prepared by the customer.

Fig. 3.2 (d) and Table 3.2 (a) show the force and the moment that apply to the base plate at Power-Off stop time and at acceleration/deceleration time and at reset time.
Table 3.2 (b) indicates the coasting time and distance until the robot stopping by Power-Off stop or by Controlled stop after input of the stop signal. Fig.3.2 (c) indicate the measurement condition.

Table 3.2 (a) Force and moment apply to the base plate

	Vertical moment M_V [kNm (kgfm)]	Force in vertical direction F_V [kN (kgf)]	Horizontal moment M_H [kNm (kgfm)]	Force in horizontal direction F_H [kN (kgf)]
At Power-Off stop	2.25 (230)	70.6 (7200)	10.8 (1100)	44.1 (4500)
At acceleration/ deceleration	0.49 (50)	44.1 (4500)	1.27 (130)	27.4 (2800)
At reset	0.00 (0)	29.4 (3000)	1.08 (110)	18.6 (1900)

Table 3.2 (b) Stopping time and distance until the robot stopping by Power-Off stop after input of stop signal

Motion & Conditions	Time (msec)	Distance (mm)	ΔW,ΔP,ΔR (deg)
(-519,0,1023,0,0,0) to (519,0,1023,0,0,0), Estop at X=0	150	189	0.245, 0.340, 0.269
(0,510,1025,0,0,0) to (0,-510,1025,0,0,0), Estop at Y=0	190	145	0.165, 1.178, 8.999
(0,0,835,0,0,40) to (0,0,835,0,0,-40), Estop at R=0	150	16	0.185,0.326,12.314

Table 3.2 (c) Stopping time and distance until the robot stopping by Controlled stop after input of stop signal

Motion & Conditions	Time (msec)	Distance (mm)
(0,510,1025,0,0,0) to (0,-510,1025,0,0,0), Controlled stop at Y=150	500	636
(-519,0,1023,0,0,0) to (519,0,1023,0,0,0), Controlled stop at X=-160	540	672

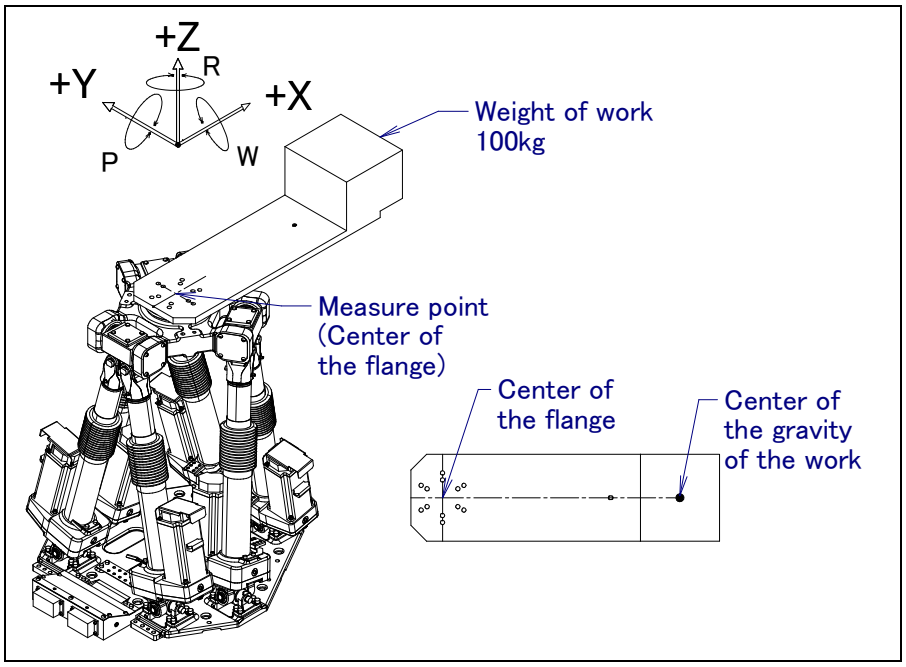

Fig.3.2 (c) Measurement condition

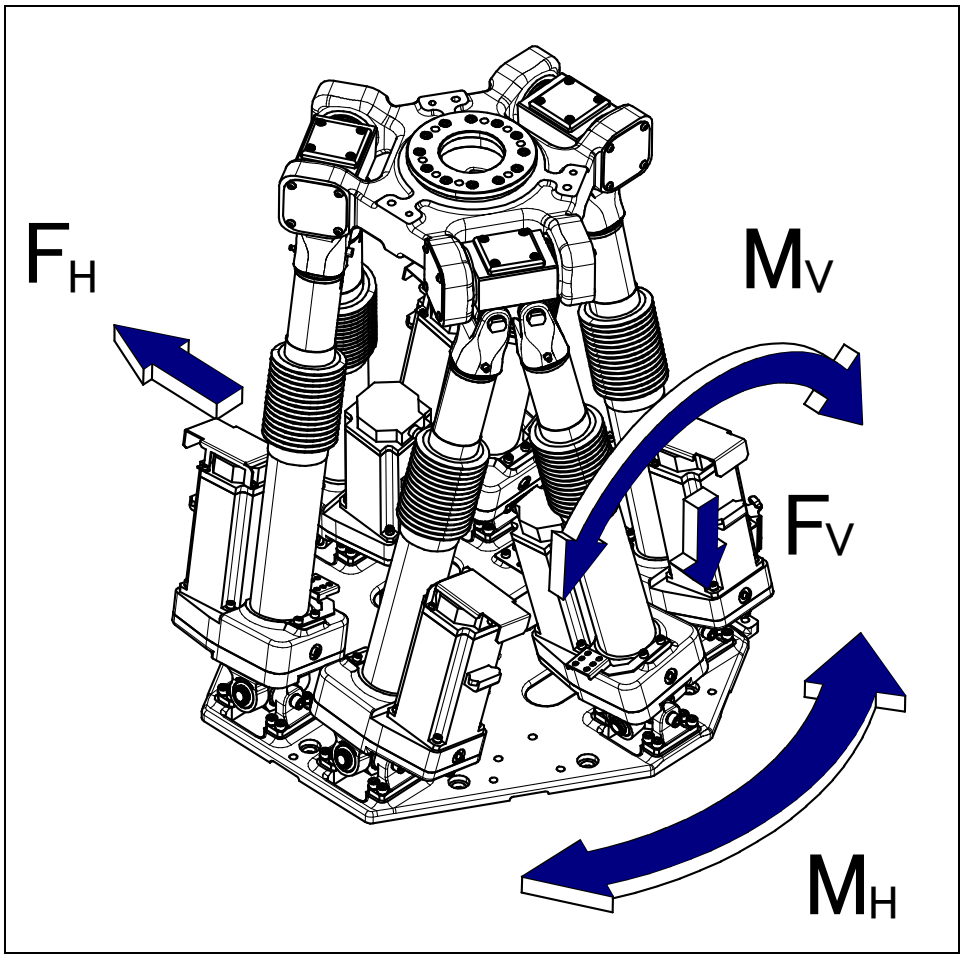

Fig.3.2 (d) Force and moment apply to the baseplate

For the F-200*i*B, the battery case is tacked at the position identified in Fig. 3.1 (a) before delivery. The customer is responsible for securing the battery case to an outside, safe location. Fig 3.2 (d) shows the outline drawing of the battery case.

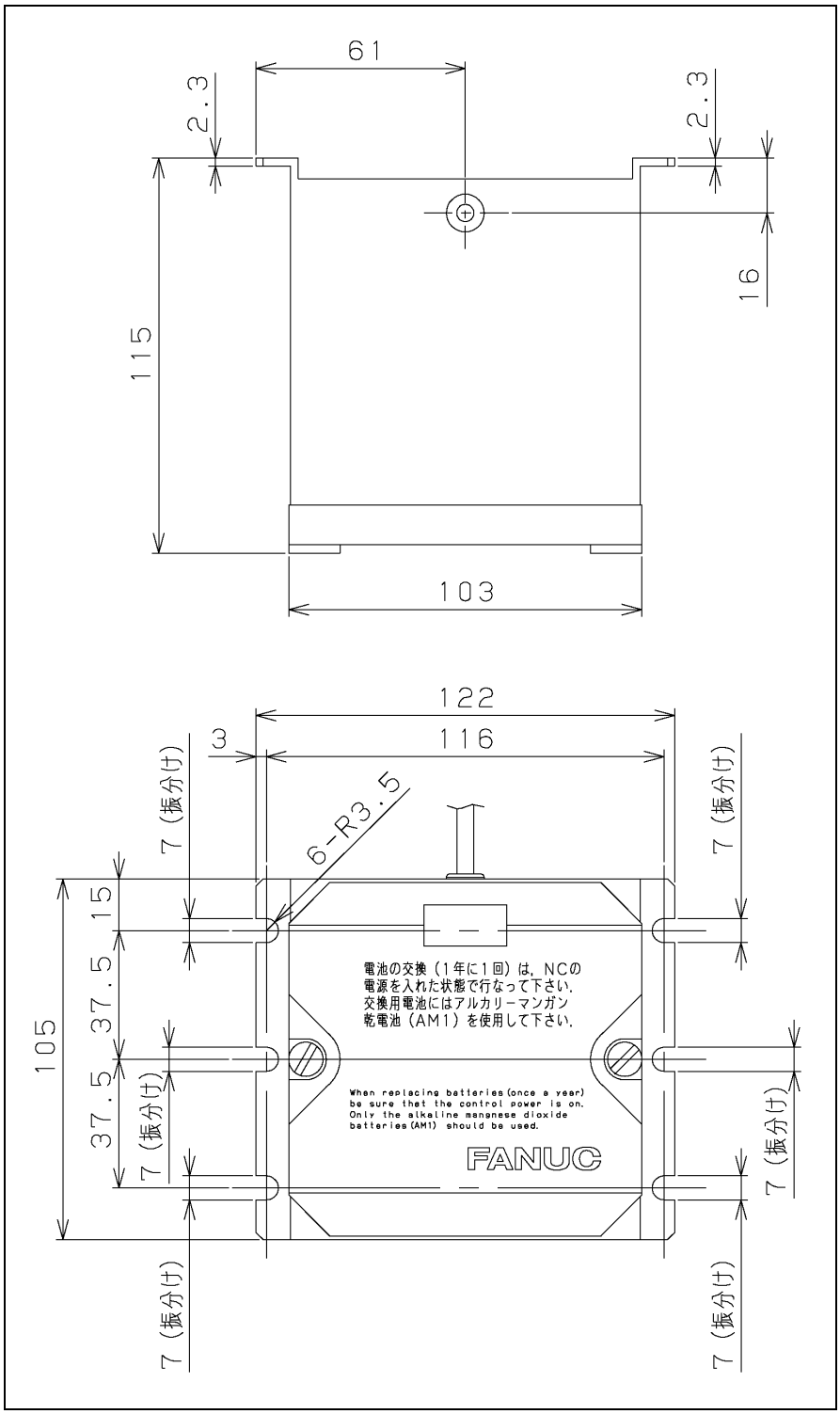

Fig.3.2 (e) Battery case

3.3 MAINTENANCE AREA

Fig. 3.3 shows the layout of the maintenance space.

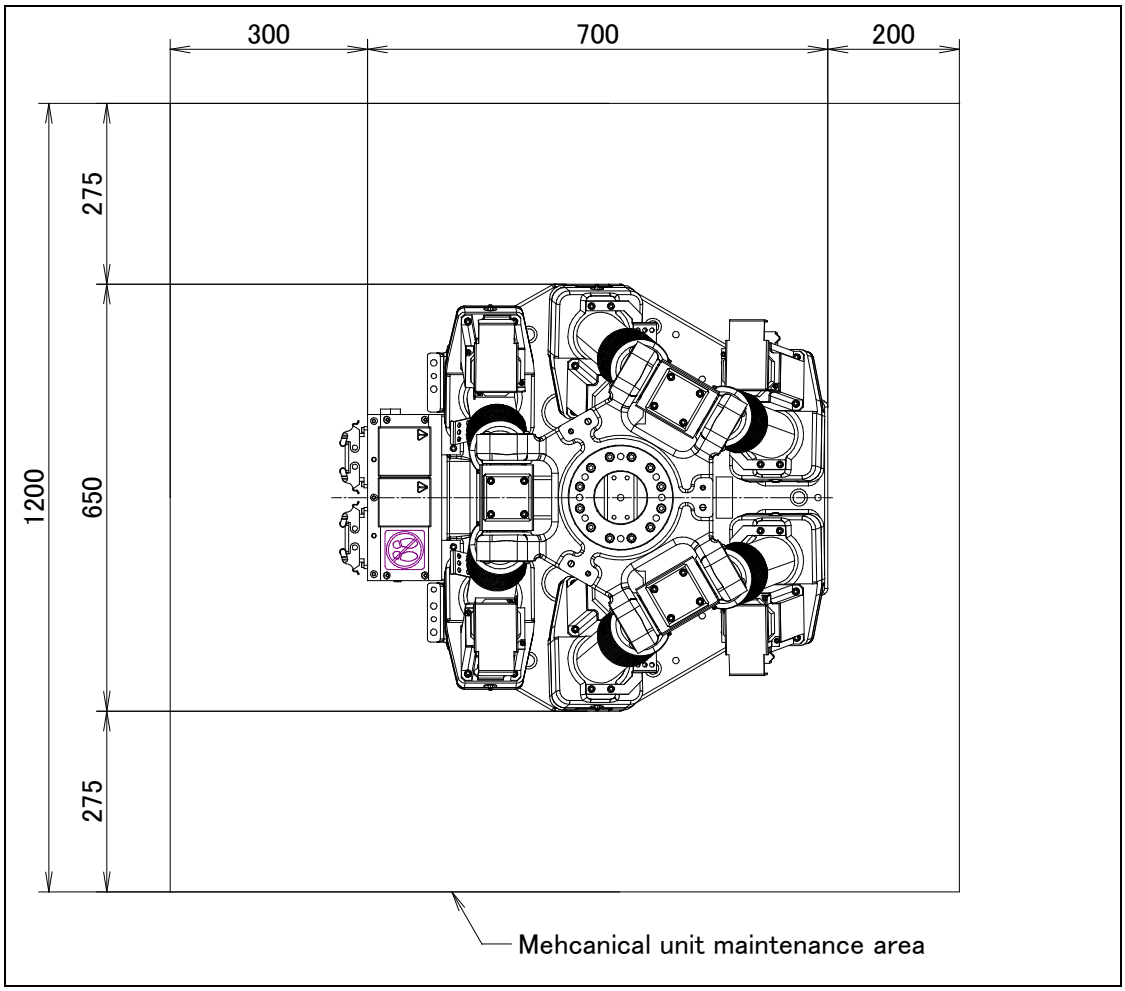

Fig.3.3 Maintenance area

3.4 AIR CONTROL SET (OPTION)

To mount the optional set of three air items, the tapped holes shown in Fig. 3.4 are required. They must be prepared by the customer.
Fill the lubricator having three air components to the specified level with turbine oil #90 to #140. The machine tool builder is required to prepare mounting bolts.

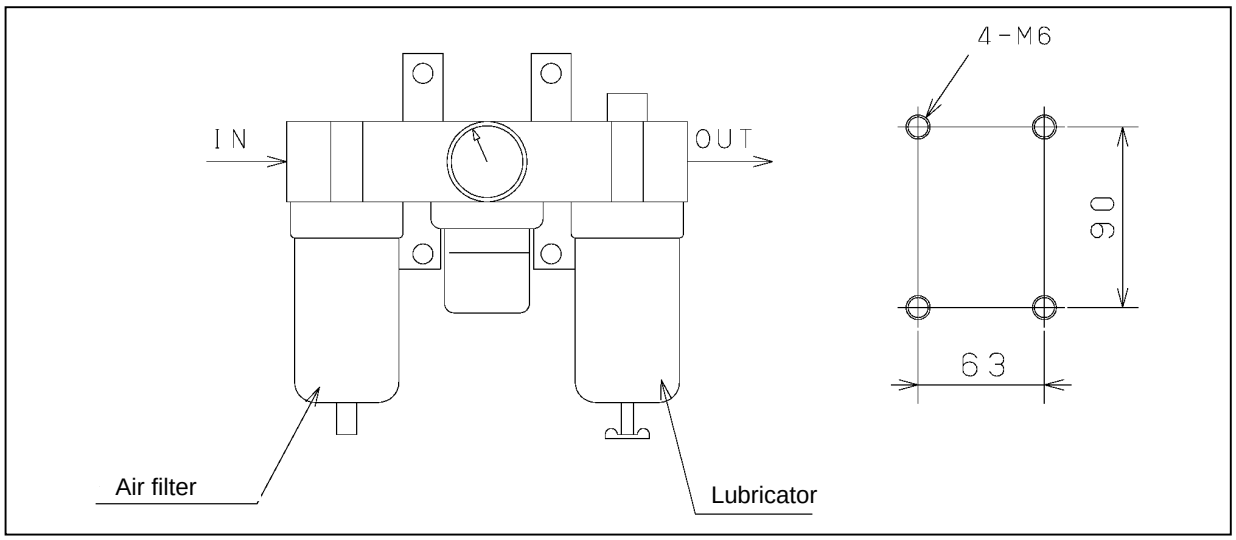

Fig.3.4 Air control set (Option)

3.5 INSTALLATION SPECIFICATIONS

Refer to specification of "PREFACE" about installation specifications.

3.6 STORAGE

To store the robot, set it to the same posture as that used for transportation.
(See II- 3.1)

APPENDIX

A SPARE PARTS LISTS

Table A (a) Cables

(a) R-J3*i*B controller

No.	Specifications	Function	Remarks
K201	A660-8014-T495	J1 to J6 POWER	
K202	A660-8014-T496	J1 to J6 PULSECODER +END EFFECTOR	
K103	A05B-1517-D001	BATTERY	

(b) R-30*i*A/ R-30*i*B controller

No.	Specifications	Function	Remarks
K201	A660-8014-T495	J1 to J6 POWER	
K302	A660-8015-T880	J1 to J6 PULSECODER +END EFFECTOR	
K103	A05B-1517-D001	BATTERY	

Table A (b) Motor

Axis	Specifications	Remarks
J1 to J6	A06B-0215-B605#S000	(Model α M4/5000*i*) Model α *i* S4/5000

NOTE: A motor whose specification number is terminated with #S000 has the built-in auxiliary seal. When ordering a motor, specify a motor whose specification number is terminated with #S000.

Table A (c) Battery grease

Name	Specifications	Remarks
Battery	A98L-0031-0005	1.5V, size D
Grease	A98L-0040-0174#2KG	Kyodo Yushi VIGOGREASE RE0
Grease	A97L-0001-0179#2	Shell Alvania Grease S2

Table A (d) Total units

Name	Specifications	Remarks
Total leg assembly	A05B-1517-K311	Leg unit (T301 and motor)
Total top assembly	A05B-1517-K501	Top plate unit (T401 and T501)

Table A (e) Other parts

Name	Specifications	Remarks
Bellows	A290-7517-X316	
Stopper	A290-7517-X315	Top portion of the ball screw
Flange	A290-7517-X320	

Table A (f) Units

Name	Specifications	Remarks
Leg assembly	A290-7517-T301	
Pipe assembly	A290-7517-T401	
Top plate assembly	A290-7517-T501	

Table A (g) Small units

Name	Specifications	Remarks
Joint fixture assembly	A05B-1517-J041	Used to combine V301 with V302
Joint assembly	A290-7517-V301	
Gearbox assembly	A290-7517-V302	
Top joint assembly	A290-7517-V501	

Table A (h) Ball screw and gears

Name	Specifications	Remarks
Ball screw	A97L-0218-0261	
Gear 1	A290-7517-Y311	Motor side
Gear 2	A290-7517-X312	Ball screw side

Table A (i) Bearings

Name	Specifications	Remarks
Bearing	A97L-0118-0515#10-0	Used in the top plate assembly (T501)
Bearing	A97L-0218-0462#30202JR	Used in the top joint assembly (V501) and the join assembly (V301).
Bearing	A97L-0218-0462#30203JR	Used in the joint assembly (V301)
Bearing	A97L-0218-0463	Used in the gearbox assembly (V302)

Table A (j) Oil seals and O-rings

Name	Specifications	Remarks
Seal	A98L-0004-0771#A25	Motor auxiliary seal (J1 to J6)
Oil seal	A98L-0040-0047#05006509	Used in the top plate assembly (T501)
Oil seal	A98L-0040-0047#02503506	Used in joint assembly (V301)
Oil seal	A98L-0040-0047#04506009	Used in the top joint assembly (V501)
Oil seal	A98L-0040-0049#02003005	Used in the gearbox assembly (V302)
Oil seal	A98L-0040-0049#02504207	Used in the gearbox assembly (V302)
O-ring	A98L-0001-0347#S42	Used in the pipe assembly (T401) and the ball screw nut
O-ring	A98L-0001-0347#S60	Used in the top plate assembly (T501)
O-ring	A98L-0001-0347#S50	Used on the motor mounting surface

Table A (k) Seal bolts, etc.

Name	Specifications	Remarks
Seal bolt	A97L-0218-0417#060808	Used in the grease outlet of the gearbox
Seal bolt	A97L-0218-0621#061414	Used in the leg assembly (T301)
Seal bolt	A97L-0218-0417#030404	Used in the top joint assembly (V501)
Silencer	A97L-0118-0026#AN120-M5	Used in the pipe assembly (T401)
Pug	A97L-0001-0436#2-1D	Used on the bottom of the gearbox
Jacket	A290-7517-Y222	Used in the full cover (option)

B CONNECTION DIAGRAM

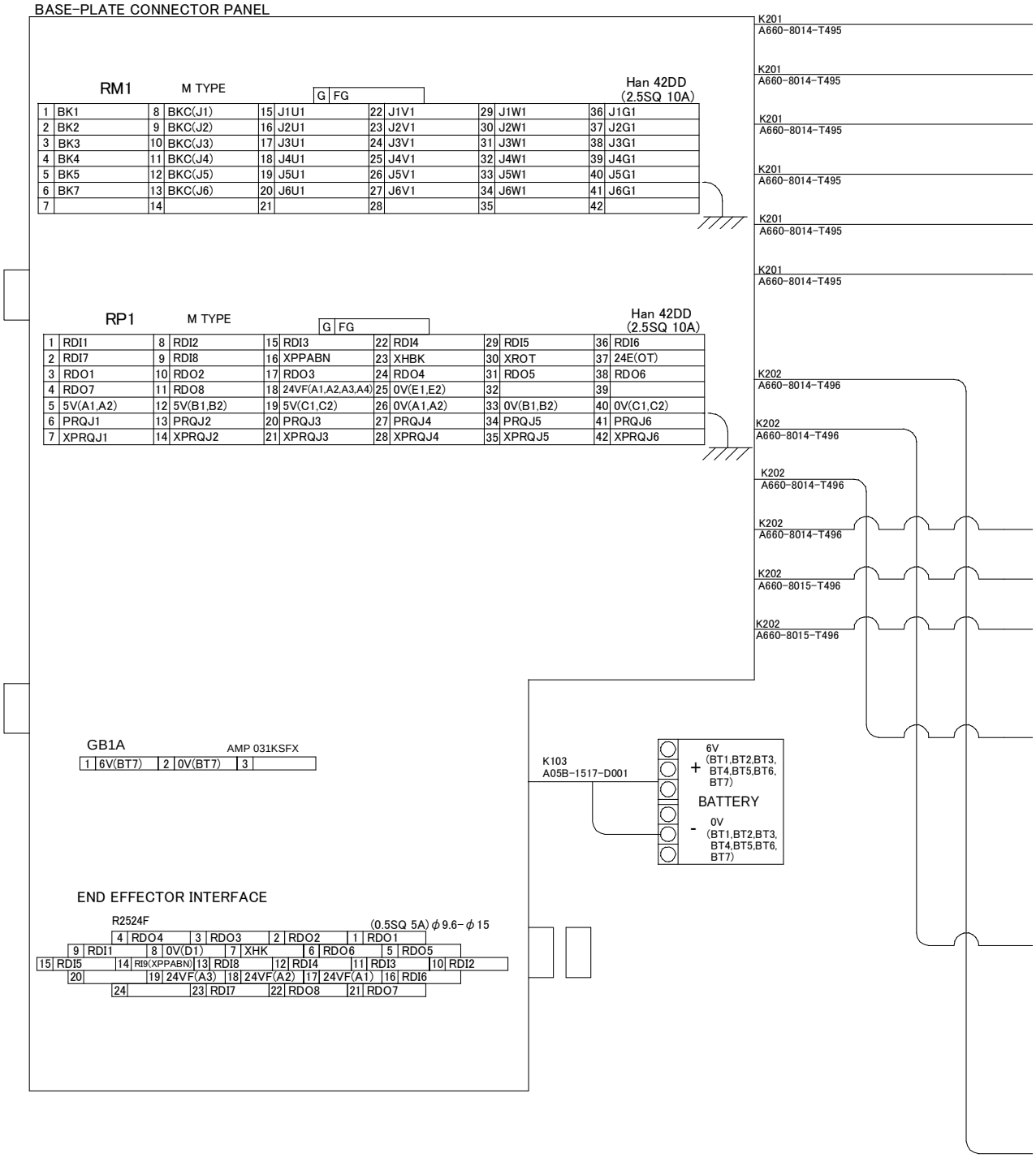

Fig.B (a) Internal connection diagram (R-J3*i*B controller)

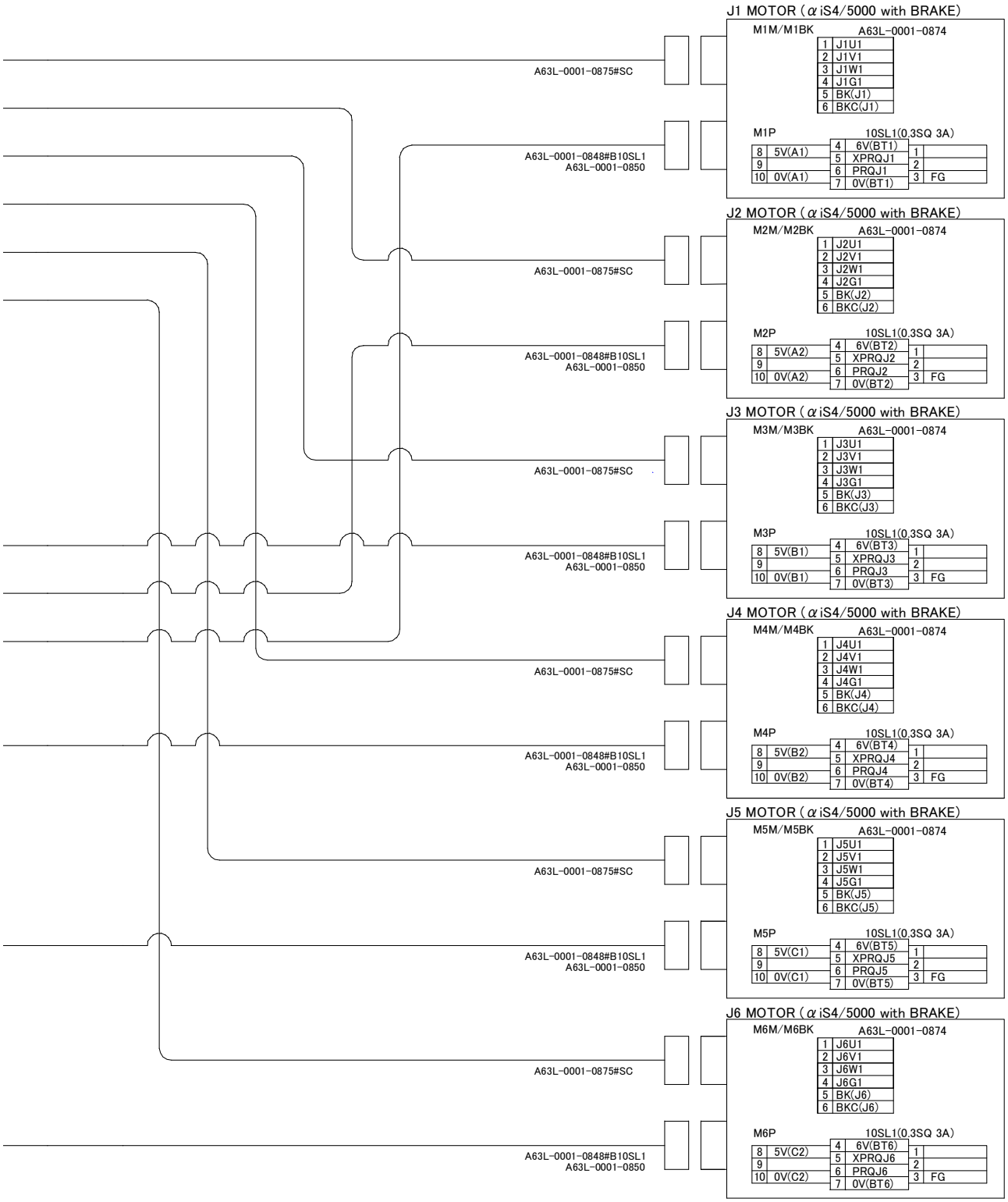
J1 MOTOR (αiS4/5000 with BRAKE)
M1M/M1BK
A63L-0001-0874
1 J1U1
2 J1V1
3 J1W1
4 J1G1
5 BK(J1)
6 BKC(J1)
M1P
10SL1(0.3SQ 3A)
8 5V(A1)
9
10 0V(A1)
4 6V(BT1)
5 XPRQJ1
6 PRQJ1
7 0V(BT1)
1
2
3 FG
A63L-0001-0875#SC
A63L-0001-0848#B10SL1
A63L-0001-0850
J2 MOTOR (αiS4/5000 with BRAKE)
M2M/M2BK
A63L-0001-0874
1 J2U1
2 J2V1
3 J2W1
4 J2G1
5 BK(J2)
6 BKC(J2)
M2P
10SL1(0.3SQ 3A)
8 5V(A2)
9
10 0V(A2)
4 6V(BT2)
5 XPRQJ2
6 PRQJ2
7 0V(BT2)
1
2
3 FG
A63L-0001-0875#SC
A63L-0001-0848#B10SL1
A63L-0001-0850
J3 MOTOR (αiS4/5000 with BRAKE)
M3M/M3BK
A63L-0001-0874
1 J3U1
2 J3V1
3 J3W1
4 J3G1
5 BK(J3)
6 BKC(J3)
M3P
10SL1(0.3SQ 3A)
8 5V(B1)
9
10 0V(B1)
4 6V(BT3)
5 XPRQJ3
6 PRQJ3
7 0V(BT3)
1
2
3 FG
A63L-0001-0875#SC
A63L-0001-0848#B10SL1
A63L-0001-0850
J4 MOTOR (αiS4/5000 with BRAKE)
M4M/M4BK
A63L-0001-0874
1 J4U1
2 J4V1
3 J4W1
4 J4G1
5 BK(J4)
6 BKC(J4)
M4P
10SL1(0.3SQ 3A)
8 5V(B2)
9
10 0V(B2)
4 6V(BT4)
5 XPRQJ4
6 PRQJ4
7 0V(BT4)
1
2
3 FG
A63L-0001-0875#SC
A63L-0001-0848#B10SL1
A63L-0001-0850
J5 MOTOR (αiS4/5000 with BRAKE)
M5M/M5BK
A63L-0001-0874
1 J5U1
2 J5V1
3 J5W1
4 J5G1
5 BK(J5)
6 BKC(J5)
M5P
10SL1(0.3SQ 3A)
8 5V(C1)
9
10 0V(C1)
4 6V(BT5)
5 XPRQJ5
6 PRQJ5
7 0V(BT5)
1
2
3 FG
A63L-0001-0875#SC
A63L-0001-0848#B10SL1
A63L-0001-0850
J6 MOTOR (αiS4/5000 with BRAKE)
M6M/M6BK
A63L-0001-0874
1 J6U1
2 J6V1
3 J6W1
4 J6G1
5 BK(J6)
6 BKC(J6)
M6P
10SL1(0.3SQ 3A)
8 5V(C2)
9
10 0V(C2)
4 6V(BT6)
5 XPRQJ6
6 PRQJ6
7 0V(BT6)
1
2
3 FG
A63L-0001-0875#SC
A63L-0001-0848#B10SL1
A63L-0001-0850

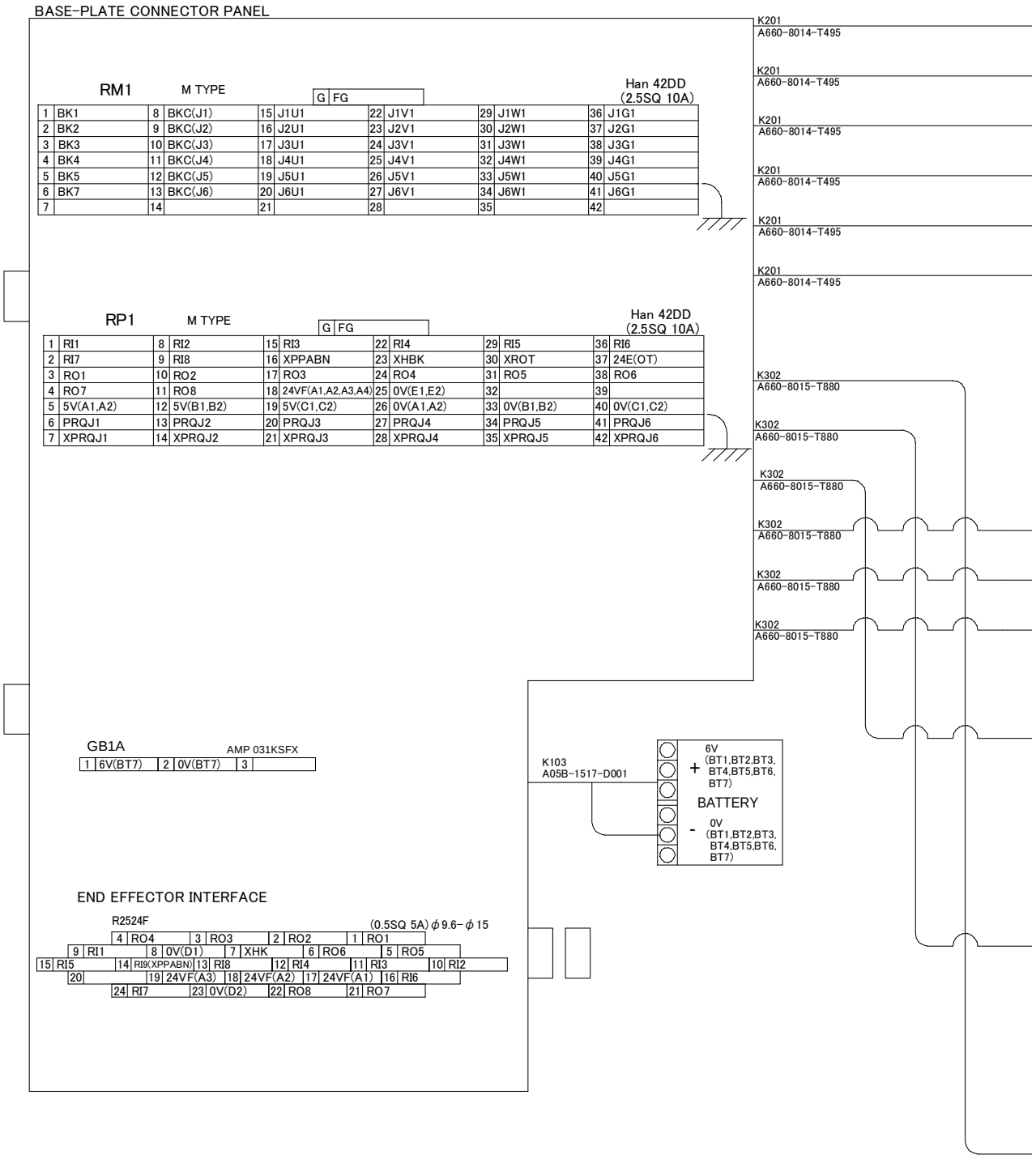

Fig.B (b) Internal connection diagram (R-30*i*A/ R-30*i*B controller)

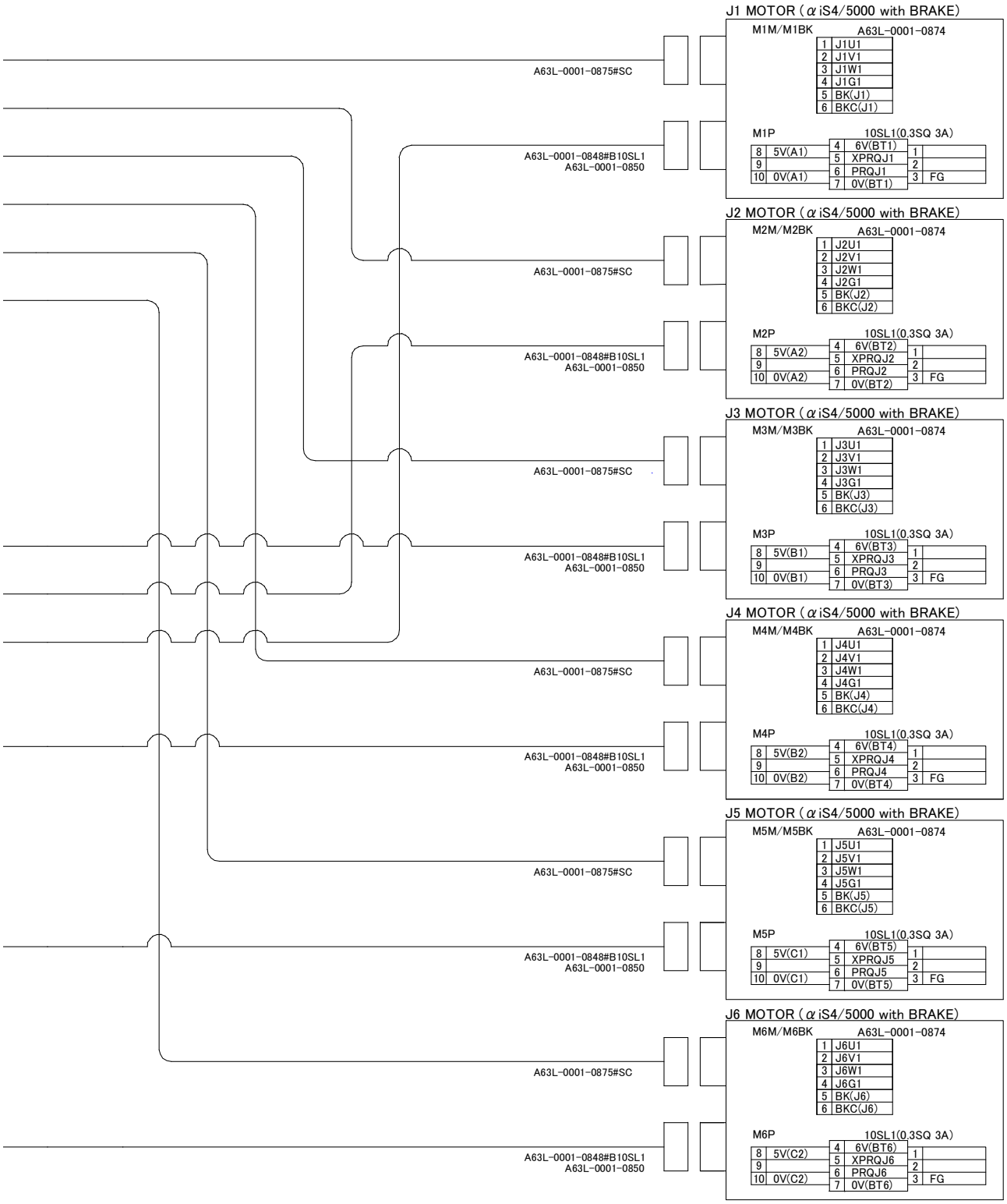
J1 MOTOR (αiS4/5000 with BRAKE)
M1M/M1BK
A63L-0001-0874
1 J1U1
2 J1V1
3 J1W1
4 J1G1
5 BK(J1)
6 BKC(J1)
M1P
10SL1(0.3SQ 3A)
8 5V(A1)
9
10 0V(A1)
4 6V(BT1)
5 XPRQJ1
6 PRQJ1
7 0V(BT1)
1
2
3 FG
A63L-0001-0875#SC
A63L-0001-0848#B10SL1
A63L-0001-0850
J2 MOTOR (αiS4/5000 with BRAKE)
M2M/M2BK
A63L-0001-0874
1 J2U1
2 J2V1
3 J2W1
4 J2G1
5 BK(J2)
6 BKC(J2)
M2P
10SL1(0.3SQ 3A)
8 5V(A2)
9
10 0V(A2)
4 6V(BT2)
5 XPRQJ2
6 PRQJ2
7 0V(BT2)
1
2
3 FG
A63L-0001-0875#SC
A63L-0001-0848#B10SL1
A63L-0001-0850
J3 MOTOR (αiS4/5000 with BRAKE)
M3M/M3BK
A63L-0001-0874
1 J3U1
2 J3V1
3 J3W1
4 J3G1
5 BK(J3)
6 BKC(J3)
M3P
10SL1(0.3SQ 3A)
8 5V(B1)
9
10 0V(B1)
4 6V(BT3)
5 XPRQJ3
6 PRQJ3
7 0V(BT3)
1
2
3 FG
A63L-0001-0875#SC
A63L-0001-0848#B10SL1
A63L-0001-0850
J4 MOTOR (αiS4/5000 with BRAKE)
M4M/M4BK
A63L-0001-0874
1 J4U1
2 J4V1
3 J4W1
4 J4G1
5 BK(J4)
6 BKC(J4)
M4P
10SL1(0.3SQ 3A)
8 5V(B2)
9
10 0V(B2)
4 6V(BT4)
5 XPRQJ4
6 PRQJ4
7 0V(BT4)
1
2
3 FG
A63L-0001-0875#SC
A63L-0001-0848#B10SL1
A63L-0001-0850
J5 MOTOR (αiS4/5000 with BRAKE)
M5M/M5BK
A63L-0001-0874
1 J5U1
2 J5V1
3 J5W1
4 J5G1
5 BK(J5)
6 BKC(J5)
M5P
10SL1(0.3SQ 3A)
8 5V(C1)
9
10 0V(C1)
4 6V(BT5)
5 XPRQJ5
6 PRQJ5
7 0V(BT5)
1
2
3 FG
A63L-0001-0875#SC
A63L-0001-0848#B10SL1
A63L-0001-0850
J6 MOTOR (αiS4/5000 with BRAKE)
M6M/M6BK
A63L-0001-0874
1 J6U1
2 J6V1
3 J6W1
4 J6G1
5 BK(J6)
6 BKC(J6)
M6P
10SL1(0.3SQ 3A)
8 5V(C2)
9
10 0V(C2)
4 6V(BT6)
5 XPRQJ6
6 PRQJ6
7 0V(BT6)
1
2
3 FG
A63L-0001-0875#SC
A63L-0001-0848#B10SL1
A63L-0001-0850

C PERIODIC MAINTENANCE

FANUC Robot F-200*i*B Periodic Maintenance Table

	Items \ Working time (H)		Check time	Grease amount	First check 320	3 month 960	6 month 1920	9 month 2880	1 years 3840	4800	5760	6720	2 years 7680	8640	9600	10560
Mechanical unit	1	Check the mechanical cable. (damaged or twisted)	0.2H	—		○			○				○			
	2	Check the motor connector. (loosening)	0.2H	—		○			○				○			
	3	Tighten the end effector bolt.	0.2H	—		○			○				○			
	4	Tighten the cover and main bolt.	2.0H	—		○			○				○			
	5	Remove spatter and dust etc.	1.0H	—		○			○				○			
	6	Check the end effector (hand) cable	0.1H	—		○			○				○			
	7	Replacing battery	0.1H	—							●					
	8	Greasing of J1 to J6-axis gearbox *1	0.5H	265ml each												
	9															
	10															
	11															
	12															
	13															
	14	Greasing to the ball screws *1	0.5H	100ml each			●		●		●		●		●	
	15	Replacing cable of mechanical unit *	4.0H													
Controller	16	Check the robot cable, teach pendant cable and robot connecting cable	0.2H	—		○			○				○			
	17	Cleaning the ventilator	0.2H	—	○	○	○	○	○	○	○	○	○	○	○	○
	18	Replacing battery *2	0.1H	—												

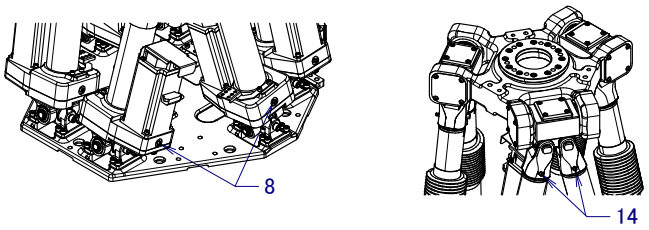

Position of grease nipple

*1 Refer to this manual about greasing points.
*2 Refer to chapter 7 of MAINTENANCE of controller maintenance manual
*3 ●: requires order of parts
○: does not require order of parts

3 years 11520	12480	13440	14400	4 years 15360	16320	17280	18240	5 years 19200	20160	21120	22080	6 years 23040	24000	24960	25920	7 years 26880	27840	28800	29760	8 years 30720	Items
○				○				○				○				○				Overhaul	1
○				○				○				○				○					2
○				○				○				○				○					3
○				○				○				○				○					4
○				○				○				○				○					5
○				○				○				○				○					6
●						●						●						●			7
●												●									8
																					9
																					10
																					11
																					12
																					13
●		●		●		●		●		●		●		●		●		●			14
				●																	15
○				○				○				○				○					16
○	○	○	○	○	○	○	○	○	○	○	○	○	○	○	○	○	○	○	○		17
				●																	18

D STRENGTH OF BOLT AND BOLT TORQUE LIST

NOTE

When applying LOCTITE to the important bolt tightening points, make sure that it is applied to the entire longitudinal portion in the engaging section of the female threads. If it is applied to the male threads, the bolts may be loosened because sufficient adhesion cannot be obtained. Remove the dust within the bolts and taps and wipe oil off the engaging section. Make sure that there is no solvent in the taps. Be sure to wipe the excess LOCTITE after tightening bolt.

Use bolt which strengths are below.
But if it is specified in text, obey it.
Hexagon socket head bolt made by steel

Size is M22 or less : Tensile strength 1200N/mm^2 or more
Size is M24 or more : Tensile strength 1000N/mm^2 or more
All size of bolt of the plating : Tensile strength 1000N/mm^2 or more

Hexagon bolt, stainless bolt, special shape bolt (button bolt, low-head bolt, flush bolt .etc)
Tensile strength 400N/mm^2 or more

If no tightening torque is specified for a bolt, tighten it according to this table.

Recommended bolt tightening torques **Unit: Nm**

Nominal diameter	Hexagon socket head bolt (Steel)		Hexagon socket head bolt (stainless)		Hexagon socket head button bolt Hexagon socket head flush bolt Low-head bolt (steel)		Hexagon bolt (steel)	
	Tightening torque		Tightening torque		Tightening torque		Tightening torque	
	Upper limit	Lower limit	Upper limit	Lower limit	Upper limit	Lower limit	Upper limit	Lower limit
M3	1.8	1.3	0.76	0.53	———	———	———	———
M4	4.0	2.8	1.8	1.3	1.8	1.3	1.7	1.2
M5	7.9	5.6	3.4	2.5	4.0	2.8	3.2	2.3
M6	14	9.6	5.8	4.1	7.9	5.6	5.5	3.8
M8	32	23	14	9.8	14	9.6	13	9.3
M10	66	46	27	19	32	23	26	19
M12	110	78	48	33	———	———	45	31
(M14)	180	130	76	53	———	———	73	51
M16	270	190	120	82	———	———	98	69
(M18)	380	260	160	110	———	———	140	96
M20	530	370	230	160	———	———	190	130
(M22)	730	510	———	———	———	———	———	———
M24	930	650	———	———	———	———	———	———
(M27)	1400	960	———	———	———	———	———	———
M30	1800	1300	———	———	———	———	———	———
M36	3200	2300	———	———	———	———	———	———
	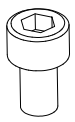				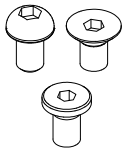		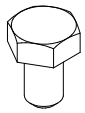	

INDEX

REVISION RECORD

Edition	Date	Contents
05	June, 2012	• Addition of R-30*i*B • Addition of note for low temperature • Addition of checks of oil exudation • Correction of errors
04	Mar.,2011	• Addition of stop type of robot • Addition of stopping time and distance when controlled stop is executed • Addition note about end effector (hand) cable • Correction of errors
03	Jan, 2008	• Procedure to move arm without drive power in emergency or abnormal situations • Addition of Stopping time and distance when emergency stop • Correction of errors
02	July, 2006	• Addition of the panel board for the R-J3*i*C • Change of the recommended grease • Addition of a model supporting the R-J3*i*C • Change of part of the mastering method • Correction of troubleshooting • Correction of the spare part list
01	Mar, 2002	

B-81725EN/05

B-81725EN/05